COLORADO
Office of State Planning
& Budgeting

111 State Capitol
Denver, Colorado 80203

October 1, 2019

The Honorable Nancy Todd
Chair, Joint Technology Committee
029 State Capitol Building
Denver, CO 80203

RE: OSPB Submission of FY 2020-21 Non-Prioritized Information Technology Capital Requests

Dear Senator Todd:

As required by § 24-37-304 (1) (c.5) (I), C.R.S., please find attached the FY 2020-21 Executive Branch information technology requests for all state departments other than the Department of Higher Education. Please note that these requests have not yet been prioritized or recommended for funding. Prioritization and funding recommendations will be presented to the Joint Technology Committee (JTC) by November 1, 2019.

Please feel free to contact me by phone at (303) 866-4205, or direct questions and concerns via email to me at benjamin.s.henderson@state.co.us. At the Committee's request, Lauren Larson and I will also make ourselves available to present any necessary information at a future meeting.

Thank you for your consideration of these requests.

Sincerely,

Ben Henderson
Deputy Director

cc: Representative Jonathan Singer, Vice Chair, JTC
Representative Mark Baisely, JTC
Representative Brianna Titone, JTC
Senator Jeff Bridges, JTC
Senator Jack Tate, JTC
Ms. Luisa Altmann, JTC Staff
Ms. Carolyn Kampman, JBC Staff Director
Mr. Alfredo Kemm, JBC Staff
Ms. Theresa Szczurek, Executive Director, Office of Information Technology

COLORADO

Office of eHealth Innovation

Jared Polis
Governor

Carrie Paykoc
Interim Director

FY 2020-21 Request Year-IT Capital Request | July 01, 2019

Signature 07.01.19 Date

RY – Department IT Capital Construction Priority: CCIT-01
Colorado Health IT Roadmap Initiatives

Summary of Request	Total Funds	CCF-IT	Cash Funds	Reappropriated Funds	Federal Funds
FY 2020-21	$4,450,000	$445,000	$0	$0	$4,005,00
FY 2021-22	$0	$0	$0	$0	$0
FY 2022-23	$0	$0	$0	$0	$0

Select One: Categories of IT Capital Projects *(most are driven by one category with components of all)*

System Replacement (costs escalating, failing technology, software or vendor support ended, or new technology, *e.g.*, DRIVES, CHATS)	**System Enhancement Regulatory Compliance** (new functionality, improved process or functionality, new demand from citizens, regulatory compliance, *e.g*, CBMS)	**Tangible Savings Process Improvement** (conscious effort to reduce or avoid costs, improve efficiency, *e.g.*, LEAN, back office automation)	**Citizen Demand "The Ways Things Are"** (transformative nature of technology, meet the citizens where they are, *e.g.*, pay online, mobile access)

Request Summary:

The Governor's Office of eHealth Innovation (OeHI) and Department of Health Care Policy and Financing (HCPF) request funds to implement phase three of Colorado's Health IT Roadmap Initiatives to support health delivery reform, payment reform, care coordination, reduce costs, and ultimately improve the value Colorado and its citizens receive from health care investments and services. This funding request is for continuation of funding for Colorado's Health IT infrastructure, governance, program, and policy. This multi-year capital IT request includes FY18/19-$6,605,000, FY19/20- $11,508,333, and FY20/21 $4,450,00.

In FY 2018-19, $6,605,000 was appropriated for phase one of the multi-year strategic investment. This appropriation includes both state funds and **anticipated** federal fund match. Delays in federal fund match approval from Centers for Medicare and Medicaid (CMS) for American Reinvestment and Recovery Health Information Technology (ARRA HITECH) Act funds have impacted OeHI's ability to plan, design, and implement projects. To date only a portion of the total funds have been matched by CMS. To address the gap in federal fund match, OeHI proactively requested the remaining federal fund match for all remaining years eligible for federal fund match. This multi-year federal fund match request was submitted to CMS on April 24, 2019. CMS has up to 60 days to review funding requests, the sixty-day mark was on June 24th, 2019. Additional delays in the review and approval of federal fund match are excepted due to changes in CMS

process and no requirement for timely review and approvals. The Lt. Governor's Office and eHealth Commission submitted letters of support advocating for the timely review and approval of federal fund match for Colorado's Health IT Roadmap efforts. On the state side, delays related to the release and unrestriction of the State appropriation of OeHI's capital IT funds in FY18/19 have also impacted project timelines. OeHI continues to move forward in early planning and scoping efforts.

Efforts to define project requirements are underway. The available funding for FY 2018-19 was primarily used for scoping and launching project efforts. As of June 2019, OeHI has spent a total of $337,601 with $286,898 encumbered for a grand total of $624,500 in FY 2018-19. This includes work with Health Tech Solutions, OeHI's Master Health IT Consultant, who provides project management, subject matter expertise, and programmatic support our eHealth Commission, Office of eHealth Innovations, and Colorado's Health IT Roadmap Working Groups. It also includes work for Mosaic Partners to develop requirements for Colorado's Consumer Portal for Health. Mosaica is to delivery high-level project requirements for this initiative by June 30, 2019. OeHI is also working with Public Knowledge to develop requirements for the Data Governance Initiative. Of the remaining total funds approved with federal fund match for FY2018-19, OeHI has scoped projects for health IT infrastructure enhancements for health information exchange, data sharing, identity management for individuals and providers, project management, and data governance. These proposed contracts were submitted to CMS for review and approval on May 2019.

For FY 2019/-20, OeHI intends to continue launching, implementing projects for Colorado's Health IT Roadmap initiatives. All projects with a federal fund match may require additional review and approval of contracts and that will directly impact project implementation timelines. Some of those activities include; procuring consumer health portal and consumer engagement solutions, transitioning technology and governance efforts established with the State Innovation Model to reduce provider reporting burden, continuing efforts to prototype and implement identity solutions for both individuals and providers, implement enhancements to Colorado's health information exchanges, and begin to align and implement technology and processes to improve care coordination in Colorado's communities. Please reference Table 3 in the Appendix A spreadsheet: Project Detail-Capital Construction-Paid Basis for detailed breakdown of costs associated with each project and when OeHI expects to complete and pay for those requirements.

For this year's request for the continuation of funding for FY 2020/2021, OeHI requests $4,450,000 total funds, including $445,000 Capital Construction Cash Fund- IT and $4,005,000 federal fund match for the final year of continuation funding. In FY 2019-20, OeHI received approval of its companion operating request for costs associated with ongoing operations and maintenance of the Roadmap initiatives. The table below shows a comprehensive estimate of the costs associated with the Colorado Health IT Roadmap. **The only funding being requested is the FY 2020-21 capital IT funding.** All other funding has been approved by the legislature.

Total Colorado Health IT Roadmap Initiative Costs

Fiscal Year	Capital Request				Operating Request			
	Total Funds	General Fund	CCF-IT	Federal Funds	**Total Funds**	General Fund	CCF-IT	Federal Funds
FY 2018-19	**$6,605,000**	$0	$1,875,500	$4,729,500	**$0**	$0	$0	$0
FY 2019-20	**$11,508,333**	$0	$1,150,833	$10,357,500	**$1,500,000**	$850,000	$0	$650,000
FY 2020-21	**$4,450,000**	$0	$445,000	$4,005,000	**$5,993,692**	$3,259,346	$0	$2,734,346
FY 2021-22	**$0**	$0	$0	$0	**$5,993,692**	$3,259,346	$0	$2,734,346

This integrated and coordinated health IT investment, is necessary to support health delivery reform, payment reform, improve care coordination, reduce costs, and ultimately improve the value Colorado and its citizens receive from health care investments and services. As part of this coordinated approach and funding request, OeHI has designed with broad stakeholder input and continues to evolve Colorado Health IT Roadmap Initiatives in alignment with the Governor and Lt. Governor and State Agency priorities. Investing in health information exchange and health information technology infrastructure and data governance in a coordinated way directly supports Governor Polis' goals to reduce health care costs. Without aligned technology, policy, and governance statewide, Coloradans will continue to pay for duplicate services and continue to face barriers when accessing health information to make informed health decisions.

State Agencies involved in the development and ongoing efforts include Colorado Department of Health Care Policy and Financing (CHCPF), Colorado Department of Public Health and Environment (CDPHE), Colorado Department of Health and Human Services (CDHS), Office of Information Technology (OIT), and the State Innovation Model (SIM). SIM is a four-year initiative funded by the Centers for Medicare & Medicaid Services to integrate behavioral and physical health care in Colorado. Colorado health providers have largely implemented electronic health records (EHRs) but much work remains to use or share this information with other health providers and insurers for value-based payment as required by Medicare Access and CHIP Reauthorization Act of 2015. Paying for value instead of quantity of health services will require consistent and easily reportable quality measures, data quality that is trusted, person and provider identification that is consistent and reliable, data sharing and health information exchange that is wide-spread, and behavioral health data that is integrated - currently, none of these elements exist beyond pilot programs. In addition, there is a need to evolve existing health IT and health information exchange systems to support the quality health care for Coloradans. The 90% federal Medicaid match funding is available to maximize the state's infrastructure investment. This federal match funding requests must align with Meaningful Use of health IT and support Medicaid Populations or advance health information exchange (HIE) infrastructure[1].

Project Description:

In 2017, Colorado's current health information exchange landscape consists of state, regional, and local stakeholders exchanging health information within Colorado's health information exchanges- Colorado Regional Health Information Organization (CORHIO) and Quality Health Network (QHN). CORHIO provides services across the state, and QHN provides service to Colorado's western slope. Colorado's health information exchanges account for over 4 million Coloradans, yet work remains to connect all hospitals and physician and specialty practices. Colorado's State Innovation Model (SIM) has also identified that 50% of physician practices are connected to a health information exchange. Opportunities exist to connect other practices and clinicians, but challenges remain. Electronic health record (EHR) vendor interface costs, availability federal funding subsidies, and health information exchange subscription costs are a few of the challenges that health providers face. Additionally, health providers do not currently have the right information at the right time. They either have too little or too much information and are currently looking for the "needle in the hay stack" of information available in CORHIO and QHN. For example, being able to

[1] State Medicaid Director (SMD) Letters #11-004 and #10-016
https://www.medicaid.gov/medicaid/data-and-systems/hie/federal-financial-participation/index.html

quickly find out if a specific patient had a positive cancer screening or visit to an emergency department amongst a long list of medical procedures and lab tests is critical to treating the whole person.

Colorado health systems have also made significant investments in Colorado's health information exchanges, while both CORHIO and QHN, Colorado's Health Information Exchanges have done tremendous work collaborating and establishing partnerships with their communities. However, work remains to connect the remaining hospitals and practices and evolve the technology to provide specific information or the "needle in the hack stack" of information that health providers need to provide quality and safe care.

This budget request is based on the initiatives identified in Colorado Health IT Roadmap efforts led by OeHI with oversight from the eHealth Commission and input from a diverse set of stakeholders which includes state agencies such as Colorado's Department of Health Care Policy and Financing (HCPF), Colorado Department of Health and Human Services (CDHS), Colorado's Department of Public Health (CPHE), Office of Information Technology (OIT) and Colorado's State Innovation Model (SIM). SIM has led many innovation health care initiatives. This includes reduce provider administrative burden by aligning and implementing standard electronic clinical quality metric initiatives. In totality, these efforts come together to leverage enhanced federal funding available through Medicaid to support improved health care delivery, improved data quality, enhanced health IT and health information exchange infrastructure, preparation for payment reform, reduced health care costs, and ultimately the improved health of all Coloradans.

Another reason for this request is fund the evolution of Colorado's health IT and health information exchange infrastructure to support the Roadmap initiatives and ultimately provide the best care, best value, and best health for Coloradans. This request includes nine initiatives developed through Colorado's Health IT Roadmap process. There are no systems replacements being contemplated in this plan, but there are new capabilities and new systems being added to Colorado's infrastructure. New capabilities and new functionality proposed in this plan include the following:

1. **eCQM Reporting Tools and Registry** - *Ease Quality Reporting Burden for Health Providers:* Funding the creation of a registry and reporting tools for electronic clinical quality measures (eCQMs), to support the evolution and alignment of technology needed for future value-based payments that include specific quality measures. SIM is funding the initial work for up to 260 physician practices. This request expands SIM's approach to additional health providers that serve Medicaid patients and then to all interested payers, providers, and patients. This tool would allow for clinical quality measures to be "captured once, reported many," in support of new value-based payment models, reducing health provider burden associated with documentation and reporting.
2. **Master Data Management (MPI/MPD)** - *Better Coordination of Services and Health Care for Coloradans through Uniquely Identifying Coloradans and Health Providers:* Funding the creation of Master Patient Index (MPI) and Master Provider Directory (MPD), as the foundation of integrated health IT and health information exchange infrastructure. MPI provides the ability to uniquely identify a person across state agencies and other external Colorado health systems to better coordinate care and services. MPD provides the ability to uniquely identify a provider and their affiliations across Colorado health systems, to support accurate attribution models in future value-based payments.

4. **Automated and Integrated Consent** - *Empower Coloradans to Authorize and Share Behavioral Health Information with Health Providers through an Integrated Consent Management Framework:* Funding the creation of a statewide framework for automated and integrated consent, to provide individuals an opportunity to consent online and authorize the sharing of protect health information not covered by Health Information Privacy and Accountability Act (HIPAA)[2] or opt out of sharing health information with certain providers. Consent is a critical component of integrating behavioral and physical health information due federal regulations related to substance use information under 42 CFR Part 2.[3]
3. **Colorado Consumer Portal for Health** - *Empower Coloradans with Accurate Health Plan and Health Provider Cost and Quality Information through an Online Consumer Portal:* Funding the creation of the Colorado Consumer Portal for Health, which would provide individuals with a central place to go that would help provide statistics and information to compare providers and health plans to empower consumers to better understand cost, quality and service measures.
4. **Advancing Colorado's State HIE Infrastructure** - *Advance the Availability, Accuracy, and Security of Health Information for Coloradans and Health Providers through Health Information Exchanges (HIEs):* Investing in Colorado's Health Information Exchanges infrastructure, to ensure that Colorado's existing health information exchanges can provide data to support value-based payment models, produce population-level analytics, and provide centralized clearinghouse functions for things such as automated patient consents, quality measurement, advanced directives, and information about clinical trials in new delivery models. This evolving infrastructure would also expand Person-Centered Data Home efforts, which coordinates clinical information sharing with other states. And further integration of health information exchanges into individual electronic health records and health information systems.
5. **Technology Infrastructure for Care Coordination** - *Better Coordination of Health Care for Coloradans through the Integration of Heath Information Technology Investments:* Improving the technology infrastructure for care coordination, so that case managers and others can properly communicate, educate, and share information around care planning and care management to support health and prevention, and intercede with the appropriate level and location of care, when intervention is warranted. Care coordination processes, tools, and technology varies across Colorado. This investment will focus on aligning processes, tools, and technology.
6. **Health IT Portfolio Management** - *Maximize Health Information Technology Investments through Portfolio Management:* Funding the creation of health IT portfolio management office (PMO) to coordinate over ninety information technology projects underway across state agencies involved in health, and health-related services. PMO would provide improved coordination of health IT projects, improved efficiencies, improved outcomes, leveraging scale and reducing costs.
7. **Data Governance Tools and Processes** - *Reduce Operational Costs, Mitigate Data Privacy and Security Risks, and Improve Consumer Confidence through Health IT Data Governance:* Funding data governance to focus on the quality and accuracy of health information, to support improvements in data sharing, analytics, care coordination, and ultimately support the accuracy and evolution of

[2] HIPAA Privacy Rule Summary: https://www.hhs.gov/sites/default/files/privacysummary.pdf?language=es
[3] Health and Human Services Final Rule-Confidentiality of Substance Use Disorder Patient Records: https://www.federalregister.gov/documents/2017/01/18/2017-00719/confidentiality-of-substance-use-disorder-patient-records

new payment models. Data governance establishes data standards, data quality, and data stewardship that are critical to the success of any health IT and health information exchange initiatives.

8. **Systems Integrator** - *Align Health Information Technology Investments through Systems Integrator:* Funding a Systems Integrator- a subject matter expert/consultant to advise on infrastructure, architecture, and data integration-to ensure interoperability of Colorado's core health information infrastructure, ensure connections between systems, promote an efficient systems architecture that is cost-effective to operate and maintain, and to ensure that the investments made through this request are configurable, modular, and scalable.

Leverage Current Capabilities

It is the intent of OeHI to leverage and enhance infrastructure already available in Colorado, rather than build new health information exchanges or technologies. In all cases, the current capabilities will be assessed for enhancements rather than "build from scratch." The existing health information exchanges and stakeholders across Colorado (e.g., health systems, providers) have made significant investments that will be leveraged. Stakeholders, across Colorado in both urban and rural settings, have expressed the need to leverage and enhance this infrastructure to meet the evolving value-based payment and care delivery needs.

Operating Budget Impact

There will be corresponding operating cost starting in FY 2019-20 for administration, maintenance, and continued operations. The multi-year appropriation was approved to begin FY 2019-20 decision item and are not included in this request. The operating budget would be needed to fund any ongoing systems maintenance, system upgrades, and any ongoing subscriber hosting/licensing fees – where these may be required in the acquisition of new functionality, such as an automated person consent system, or a master provider directory. In addition, where needed, operating expenses are needed for contractual services to support to these new functions, such as supporting and maintaining new systems (e.g., testing the upgrades, providing user support.), as well as staffing the new health IT program and portfolio management office.

Problem or Opportunity:

An Evolving Health IT Ecosystem: 2021 and Beyond

Health information technology (health IT or HIT) includes an array of technologies such as electronic health records (EHRs) to store, share, and analyze health information. Health providers are using health IT to improve patient care and patients use health IT to better communicate with their doctor, learn and share information about their health, and take actions to improve quality of life.

Health Information Exchanges (HIEs) allows doctors, nurses, pharmacists, other health providers and patients to appropriately access and securely share a patient's vital medical information electronically—improving the speed, quality, safety and cost of patient care. Health information exchanges reduce duplicate testing, reduce medical errors, reduce hospital readmission, and improve diagnosis and treatment. Health information exchanges are now being used for Medicare and Medicaid's required value-based payment programs. Many health providers, health systems, and insurance payers have implemented health IT systems

that are not integrated to health information exchanges and have created silos of health information. Health Information Exchange Organizations such as Colorado Regional Health Information Network (CORHIO) and Quality Health Network (QHN) provide a manner to connect data silos to provide a more holistic view for health provider on their patients.

Now that most health providers in Colorado are using electronic health records (EHRs), the focus has shifted from implementing individual health records to optimizing these systems and sharing health information across health and state IT systems to accurately measure quality and cost of care. This approach will ensure the right information is available to health providers at the right time and will advance the integration and availability of both physical and behavioral health information for care coordination and care delivery.

Integrating these systems in a thoughtful and coordinated manner will ultimately reduce the administrative burden for health providers and reduce medical cost to citizens. All enhanced sharing of health information will be in accordance with state and federal regulations and security protocols. The advancement and alignment of health IT and health information exchange infrastructure and initiatives is more effective with this coordinated effort than pursing each of these components individually. This request contains funding to enhance technical assistance for health providers through training/education, workflow analysis, and data quality efforts. This aligned approach would not only create efficiencies but would ultimately improve the quality of care delivered and support value-based payment. As health care costs continue to rise, a transparent and integrated approach to data quality would enable Coloradans to save money on health care and ensure Coloradans get the care they need. This integrated technology approach directly aligns with the Governor's Office of Saving People Money on Healthcare.[4]

One strategy key strategy for achieving Colorado's State of Health is the establishment and advancement of health information exchanges (HIEs). Federal investments and grants have established Colorado's health information exchange (HIEs) under the ARRA HITECH Act- 90% Federal Funding Match. Specifically, pursuant to 42 CFR § 495.322, 90% federal match is available for administrative activities in support of implementing incentive payments to Medicaid eligible providers, subject to prior approval from the Centers for Medicare and Medicaid Services (CMS). As care delivery and value-based payment continue to evolve, Colorado's health IT and health information exchange infrastructure must also evolve to provide clinician with the right information at the right time. Therefore, Colorado has an opportunity to finance the updated design, development, and implementation of health IT and health information exchange initiatives included in this request at the 90% Medicaid matching funds. Ongoing operations and support for the Medicaid share of projects would receive the standard fifty percent (50%) Medicaid administrative matching funds. Funding requested for the electronic clinical quality measurement (eCQM) initiative would be used to expand Colorado's State Innovation Model eCQM initiative to Medicaid and other payers for statewide utilization. SIM currently is focused on establishing eCQM infrastructure and technical assistance for 260 primary care practices and ends in July 2019. OeHI is moving forward efforts to transition this work.

As mentioned in the Executive Summary Colorado's Medicaid Office, Health Care Policy and Financing (HCPF) is partnering with the Office of eHealth Innovation to further refine how health information exchange

[4]Office of Saving People Money on Healthcare https://www.colorado.gov/pacific/ltgovernor/office-saving-people-money-healthcare

is leveraged by Medicaid administrators and health providers to provide better care at a lower cost. Because claims data is not timely, the health information exchange information is a key data source for actionable data for the Medicaid program. It is currently used to notify the Regional Care Collaborative Organizations (RCCOs) when a member is admitted to the hospital or visits the emergency department, so that the RCCOs can arrange the appropriate follow-up care. However, this is an enormous amount of data to send daily to care coordinators and health providers. Through this funding request and Roadmap Initiatives, Medicaid intends to enhance how health providers are notified and tailor the information shared from the health information exchanges to further improve care and reduce costs. Below are a few specific examples:

- Enriching the clinical data with Medicaid demographic data and risk scores, the accountable care organizations would use this enhanced information to prioritize their outreach and focus on members with the highest needs.
- Health information exchanges could send Medicaid specific clinical data elements for individual members that could be integrated with claims data to calculate these quality measures across the Medicaid program. This data would improve the analytics for the accountable care collaborative program and Medicaid's value-based payment initiatives and would better align with what providers are seeing in their EHRs.
- Medicaid does not have complete claims history for clients who churn from commercial insurance to Medicaid. The All Payers Claims Database (APCD) could send Medicaid claims data for these clients, which could be used to populate Medicaid's patient health record in the provider web portal. More complete claims data for these members would help reduce duplication of services. Further, Medicaid could use this data to identify a member's prior primary care physician to keep the member's point of care consistent, even as their insurance changes.

This significant funding opportunity, initial focused on Medicaid populations and then statewide, would help to implement and advance foundational health IT systems and programs, to further integrate electronic health records (EHRs) and health information exchanges across Colorado for better access to health information, reduce costs through better coordination of care, to improve consumer engagement and health literacy, and to continue the integration of physical and behavioral health. The elements contained in these requests, are part of an integrated, comprehensive approach, and need to be considered in totality, as their interdependencies are significant.

Proposed Solution:

In FY 2020-21 OeHI is requesting the final year of a multi-year capital IT request of $4,450,000 total funds which includes $445,000 capital construction cash funds and $4,005,00 federal funds. This is the third and final year of this capital construction funding request.

Summary of Request	Total Funds	CCF-IT	Cash Funds	Reappropriated Funds	Federal Funds
FY 2020-21	$4,450,000	$445,000	$0	$0	$4,005,00
FY 2021-22	$0	$0	$0	$0	$0
FY 2022-23	$0	$0	$0	$0	$0

Justification:

Requirements of Senate Bill 17-304

By working collaboratively with OIT, the initiatives under this request follow state requirements for information technology projects. Though the Office of eHealth Innovation (OeHI) would not directly build or operate any technical infrastructure, the agency would define the minimum criteria for qualified organizations that would provide the statewide, common technical services supporting advanced health IT interoperability. The OeHI would release request for proposals (RFPs) or invitations to negotiate (ITN) to qualified organizations that could design, develop, and implement the initiatives (initially funding through HITECH Act enhanced Medicaid funding) and then require that the sustainability plans for the initiatives are through public and private funding models (e.g., subscriptions, usage payments). To ensure compliance with SB 17-304, the agency intends to release all requests for proposals (RFPs) and invitations to negotiate (ITNs) with requirements and proposed budgets as draft for public comment. To date the agency has posted several iterations of draft requirements for the Master Person Patient Index (MPI), and Master Provider Directory (MPD) initiatives.

This targeted approach works more effectively and efficiently than releasing broad requests for information (RFI), where vendors typically withhold good budget or cost information. Through the draft, RFPs and ITNs the agency would obtain more specific project and budget amounts prior to releasing the final RFPs and contracts. The current estimated funding would be used to create the technology infrastructure and to support the ongoing operating and maintenance costs of the following projects. OeHI would issue RFPs and ITNs to seek out qualified organizations to design, develop, and implement the initiatives. The organizations would have to demonstrate sustainability plans for the initiatives through public and private funding models (e.g., subscriptions, usage payments).

Many of the initiatives in the Colorado Health IT Roadmap are newer solutions, and statewide solutions across the nation have just begun. Therefore, the requested funding in this request are based on market research with consultants, other states, the Centers for Medicare and Medicaid Services, and the Office of the National Coordinator.

The Nine Initiatives in this Request

The OeHI, under the advice and governance of the eHealth Commission, is finalizing a health IT roadmap for the state of Colorado, called the Colorado Health IT Roadmap. This planning process has been supported by a national recognized contractor, who have assisted several other progressive states in developing similar roadmaps (e.g., Arizona's Health IT Roadmap 2.0[5]). Key objectives have been identified through broad, statewide, stakeholder engagement, including workshops, working groups, and surveys. Through a planning

[5] Arizona Health IT Roadmap: https://healthcurrent.org/wp-content/uploads/2016/03/arizona_health_it_roadmap_2.pdf

process that examined objectives, capabilities and enablers, several key initiatives have been identified in the Colorado Health IT Roadmap. In addition, through a planning process supported by the State Innovation Model (SIM), through their contractor, federal agencies, and stakeholders, has also identified key initiatives required to support value-based payment, and integration of behavioral health and primary care. These two planning efforts have aligned and integrated, to produce the initiatives described in this budget request. The combined efforts directly support the state to become the healthiest state in the nation. Below is a summary of the initiatives and projects and corresponding projects and funding being requested.

Initiative	Project Funding Request	Alignment with Governor Polis' Health Care Priorities
eCQM Reporting Tools and Registry	• Expand and enhance health information technology infrastructure being piloted by the State Innovation Model to all Medicaid providers and then for statewide utility.	• This infrastructure investment supports paying for value instead of transactional health care costs. • Overtime will save consumers money on health care by paying for value. • Leverages existing infrastructure investments in health information exchanges. Reduces duplicate investments.
Master Data Management (MPI/MPD)	• Design, Develop, and Implement process and system to establish unique identify across systems. • Advance Provider Directory efforts led by Colorado Public Health and Environment to statewide utility.	• Infrastructure investment and alignment supports improved care coordination across state and community systems. • Improved care coordination reduces emergency room visits and follow-up visits-ultimately reducing costs to consumers[6].
Automated and Integrated Consent	• Advance pilot efforts led by CORHIO and QHN Colorado's Health Information Exchanges and design, develop, and implement statewide consent framework or statewide utility.	• An agreed upon consent process enables better coordination of health and social services. • Consumers save time and money through coordinated services.
Colorado Consumer Portal for Health	• Design, develop, and implement solution for consumers to understand health care cost, service, and quality.	• Providing trusted resources and information to consumers about health care costs drives down health care spend.
Advancing Colorado's State HIE Infrastructure	• Invest in health information exchange infrastructure to support bi-directional and quality measurement capabilities	• Sharing health information across health systems and payers improves care coordination, reduces duplicate tests, and ultimately reduces costs to consumers.

[6] https://jamanetwork.com/journals/jamanetworkopen/fullarticle/2712173

Technology Infrastructure for Care Coordination	• Research and implement whole person care coordination (health and social) technology investments and develop an integrated framework to align efforts statewide.	• Infrastructure investment and alignment supports improved care coordination across state and community systems. • Improved care coordination reduces emergency room visits and follow-up visits-ultimately reducing costs to consumers[7].
Health IT Portfolio Management	• PMO specifically focused on health information technology and health information exchange initiatives to ensure that program deliverables are met, outcomes are achieved, and that resources have been used most efficiently.	• Coordination of health IT investments ensures projects are not duplicative and are executed on time and on budget.
Data Governance Tools and Processes	• Identify, Assess, and Implement Data Governance for Health IT Projects outlined in this request.	• Data governance allows for a trusted process and system to coordinated care and support value-based payment.
Systems Integrator	• Subject matter expert to assist implementation to ensure new systems integrated with existing technology investments.	• Systems integration ensures systems are interoperable and managed in a coordinated way.

Consequences if not Funded

HITECH funding is only available through September 30, 2021, creating a limited window in which Colorado can leverage a high percentage of federal matching funds to build and improve Colorado's health IT and health information exchange infrastructure. Without swift action, Colorado would be unable to take advantage of the high rate of federal financial participation; without the federal funds, a ten-fold increase in state investment would be required in the future to achieve the same goals.

Without adequate state funding for the health IT and health information exchange initiatives described in the request, Colorado would fall behind in the necessary infrastructure to advance access to health information, reduce costs through better coordination of care, to improve consumer engagement and health literacy, and to continue the integration of physical and behavioral health. In addition, the state may potentially waste state SIM grant funds already used in preparation of these initiatives.

For example, without funding for solutions that include a Master Patient Index (MPI) and Master Provider Directory (MPD) the future uses of new payment models would be plagued by a lack of accuracy in patient and provider identification, data integrity, and a lack of trusted attribution of patients to providers for advanced payment methods. An MPI would also give Colorado an important tool to better coordinate patient services and manage costs across various health-related state agencies by correctly identifying a person and linking their records together. In addition, the State's investments in "social determinants of health" (such as housing, food, and heat assistance), could be linked by patient, and data could be more easily collected that

[7] https://jamanetwork.com/journals/jamanetworkopen/fullarticle/2712173

would demonstrate how investments in social supports are reducing costs, including Medicaid. These initiatives would help improve the accurate exchange of health information for care coordination and would improve the accuracy of health data analytics.

If the State does not continue these critical efforts, then Colorado would fall behind in the progression of health care delivery and health payment reform, resulting in potentially increased costs in the future as major "systems remedy" and/or "catch up" work is required to expedite these foundational elements. Continuing with the status quo would result in a degradation of service through poor citizen service coordination, inefficiencies in program management, and decreased health for the citizens of Colorado.

Anticipated Outcomes:
As part of the Office of eHealth Innovation's (OeHI) launch of the Health IT Project Management Office and procurement of initiative projects, OeHI intends to define success metrics and outcomes for each of the funded initiatives. OeHI will be working to contract an entity to evaluate program outcomes.

Implementation Plan:

The Implementation plans for these initiatives are being developed by the OeHI, in collaboration with the Office of Information Technology (OIT), managed day-to-day by the new Health IT Portfolio Management Office (PMO), and governed by the eHealth Commission, which has been serving as the Steering Committee for the creation of the Colorado Health IT Roadmap. Through the development of Colorado's Health IT PMO specific metrics and outcomes are being defined for all funded efforts. As mentioned previously, several delays in funding match have directly impacted OeHI's ability to implement effort although scoping and planning efforts are underway. As part of this planning effort and ongoing assessment research has been done to understand how other states have planned, designed, and implemented statewide health IT leveraging ARRA HITECH funds. Attached in Appendix B includes literature research from the initial request and in Appendix C includes research on investments other states have made on health information exchange and health information technology to improve care and reduce costs. The following picture depicts' OeHI and the eHealth Commission governing structure.

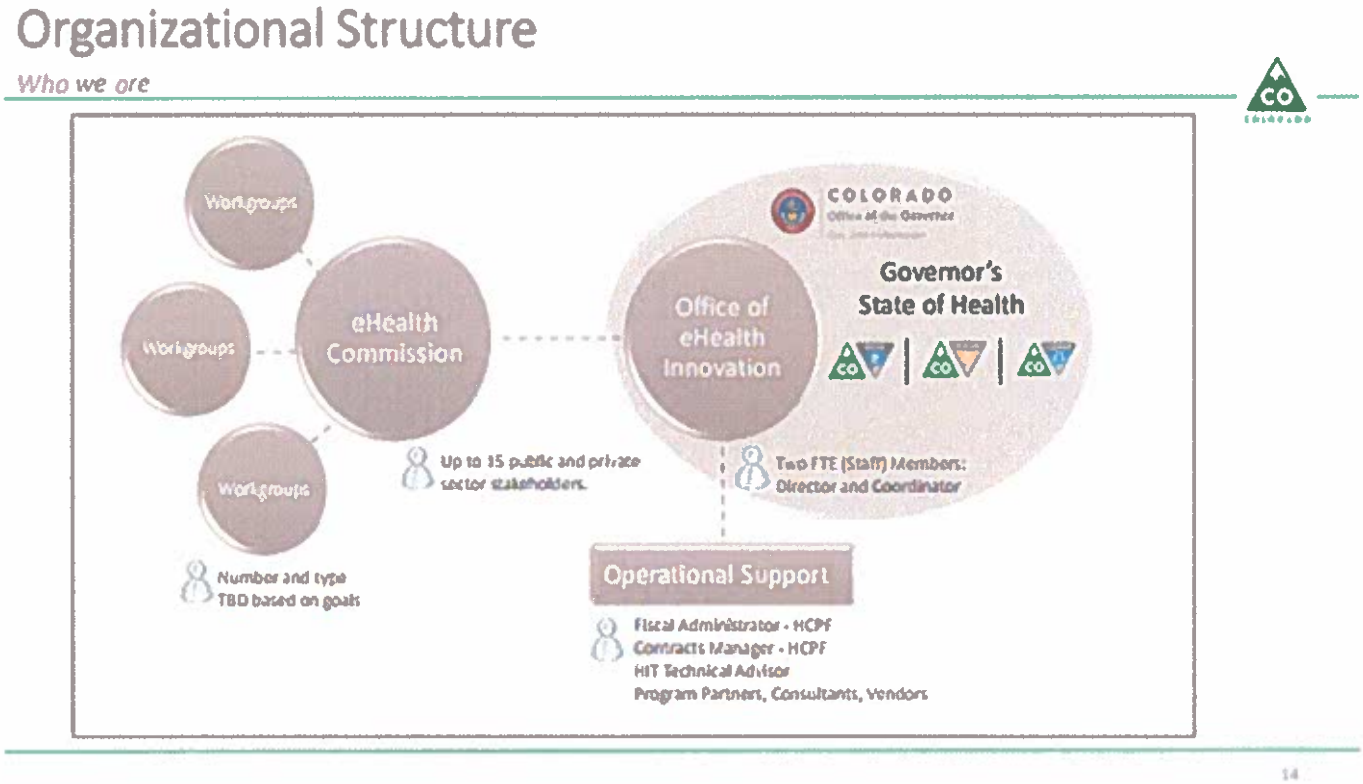

Diagram 2

Change Management

Change Management for the implementation, evaluation, and sustainment of Colorado's State Health It Roadmap is critical to the ongoing success of the program and project efforts. In partnership with OIT- efforts are underway to define necessary project change management for each procurement as part of OeHI's Health IT PMO. This includes training, communication, and testing as applicable. Additional change management and technical assistance for statewide initiatives such as the implementation of electronic clinical quality measurement report is necessary to ensure providers adopt the technology in a meaningful way.

Alignment with OIT Best Practices or Standards

The HCPF Five Year Roadmap specifically notes partnership with the State Innovation Model within HCPF and OeHI. Additionally, all efforts outlined in this proposal would follow standard OIT policies and standards. This includes all Cyber Security Policies, all IT standards, and partnership with the Governor's Data Advisory Board.

Procurement

The procurement of Colorado's Health IT Roadmap initiatives involves both programmatic (non-technical) efforts and technical projects. OIT is directly involved with OeHI scoping and procurement of solutions through the Health IT PMO. OeHI has a few pathways to procure solutions based on the nature of the proposal and solution and the impact to state agency infrastructure. OeHI is in the process of finalizing an interagency with the OIT to contract for necessary project managers and technical staff and to fund several health information exchange projects. Projects are gated through OIT as applicable. All FY19/20 enhancements to

health information exchange and identity efforts have started OIT's gating process. OeHI continues to work with OIT in a coordinated and collaborative manner.

Security and Backup/Disaster Recovery

All implementations would be compliant with all existing state and federal IT architecture, security and business continuity requirements and guidelines, and State cybersecurity policies set forth by the Office of Information Security. Additionally, all OIT Project Gating would be closely followed to ensure adequate risk assessments are conducted and all necessary actions are taken as a result. The Disaster Recovery Plan is a requirement of Gate 4 and the Authorization to Operate would not be granted without the needed documentation and planning.

Accessibility Compliance

It is not clear what portions of implementation would require accessibility compliance. However, as these items are developed, compliance would be ensured.

Impact to IT Common Policy

It is not anticipated that this request would impact common policy. Any ongoing appropriations would be directly appropriated to the Department of Health Care Policy and Financing or the Governor's Office.

Cost-Benefit Analysis and Project Alternatives- H.B. 15-1266

OeHI conducted research to determine the value of implemented enhancements and improved coordination of statewide health IT infrastructure prior to submitting the multi-year capital IT request for FY18/19. Attached is the initial literature research conducted in 2018 titled Appendix C and the recent research on state investments of ARRA HITECH ACT funds for health information exchange and health information technology infrastructure titled Appendix B. OeHI has also reviewed and continues to review how other state's leverage Federal Funds to invest in state infrastructure. See attached for a summary and analysis for other state investments. Additionally, as OeHI implements projects, each project will have specific metrics and outcomes to track and measure the impact of the investment to the state. Initial planning for financial models is underway.

Assumptions and Calculations:

The attached is FY2020-21 Capital Cash IT (CCIT-01) Colorado Health IT Roadmap Initiatives Appendix A includes a multi-year summary by component, project detail, and additional information. The Assumptions for the calculations are as follows.

Summary by Component

Table 1.3 shows the FY 2020-21 current year funding request. Tables 1.1, 1.2, and 1.4 show the total requested amount for the request year of FY 2018-19, FY 2019-20, and the continuation years of FY 2021-22 by fund split.

Project Detail Section

Table 2 shows detail for the costs for each project by fiscal year. The costs are broken out by each component in the project. This table is shown on a request basis. This means that the amounts shown are when the OeHI is requesting to have the funding available. Table 3 shows similar information, a breakout by project and component, only the costs associated with a given fiscal year is when it is expected those funds will be paid.

ADDITIONAL REQUEST INFORMATION		
Please indicate if three-year roll forward spending authority is required.	☒ Yes	☐ No
Is this a continuation of a project appropriated in a prior year?	☒ Yes	☐ No
If this is a continuation project, what is the State Controller Project Number?		
Please attach letter from OIT indicating review and approval of this project		

CONTINUATION HISTORY (DELETE IF NOT APPLICABLE)				
	FY 2018-19 Appropriated	FY 2019-20 Appropriated	FY 2XXX-XX Appropriated	**Total Appropriations**
Total Funds	$6,605,000	$11,408,333		**$18,013,333**
Capital Construction Funds	$1,875,500	$1,140,833		**$3,016,333**
Cash Funds	$0	$0		**$0**
Reappropriated Funds	$0	$0		**$0**
Federal Funds	$4,729,500	$10,267,500		**$14,997,000**
	FY 2018-19	FY 2019-20	FY 2XXX-XX	**Total**
Amount Spent				
Amount Encumbered				
Total Funds Available				

ESTIMATED PROJECT TIME TABLE		
Steps to be completed	**Start Date**	**Completion Date**

CASH FUND PROJECTIONS (DELETE IF NOT APPLICABLE)

Cash Fund name and number:	
Statutory reference to Cash Fund:	
Describe how revenue accrues to the fund:	
Describe any changes in revenue collections that will be necessary to fund this project:	

FY 2018-19 Actual Ending Fund Balance	FY 2019-20 Projected Ending Fund Balance	FY 2019-20 Projected Ending Fund Balance with Project Approval	FY 2020-21 Projected Ending Fund Balance with Project Approval
$	$	$	$

RY_CC-IT: CAPITAL CONSTRUCTION INFORMATION TECHNOLOGY REQUEST FOR FY 2020-21

Department:	Governor's Office of eHealth Innovation (OeHI)	Signature Department Approval:	Date 07.01.19
Project Title:	Colorado Health IT Roadmap	Signature OIT Approval:	Date 9/27/19
Project Year(s):	FY 2018-19 through FY 2020-21	Signature OSPB Approval:	Date 10/1/19
Department Priority Number:	1		
Five-Year Roadmap:	Yes or No	Name and e-mail address of preparer:	CARRIE.PaykOC@State.CO.US

Revision? Yes No If yes, list changes to date	Total Project Costs	Total Prior Year Appropriations	Current Request FY 2020-21	Year 2 Request	Year 3 Request	Year 4 Request	Year 5 Request
A. Contract Professional Services							
(1) Consultants/Contractors	$ 22,463,333	$ 18,013,333	$ 4,450,000	$ -	$ -	$ -	$ -
(2) Quality Assurance	$ -	$ -		$ -	$ -	$ -	$ -
(3) Independent Verification and Validation (IV&V)	$ -	$ -	$ -	$ -	$ -	$ -	$ -
(4) Training	$ -	$ -	$ -	$ -	$ -	$ -	$ -
(5) Leased Space (Temporary)	$ -	$ -	$ -	$ -	$ -	$ -	$ -
(6) Feasibility Study	$ -	$ -	$ -	$ -	$ -	$ -	$ -
(7a) Inflation for Professional Services	$ -	$ -	$ -	$ -	$ -	$ -	$ -
(7b) Inflation Percentage Applied		0.00%	0.00%	0.00%	0.00%	0.00%	0.00%
(8) Other Services/Costs	$ -	$ -	$ -	$ -	$ -	$ -	$ -
(9) *Total Professional Services*	$ 22,463,333	$ 18,013,333	$ 4,450,000	$ -	$ -	$ -	$ -
B. Software Development							
(1) Software COTS	$ -	$ -	$ -	$ -	$ -	$ -	$ -
(2) Software Built	$ -	$ -	$ -	$ -	$ -	$ -	$ -
(3a) Inflation on Software	$ -	$ -	$ -	$ -	$ -	$ -	$ -
(3b) Inflation Percentage Applied		0.00%	0.00%	0.00%	0.00%	0.00%	0.00%
(4) *Total Software*	$ -	$ -	$ -	$ -	$ -	$ -	$ -
C. Equipment							
(1) Servers	$ -	$ -	$ -	$ -	$ -	$ -	$ -
(2) PCs, Laptops, Terminals, PDAs	$ -	$ -	$ -	$ -	$ -	$ -	$ -
(3) Printers, Scanners, Peripherals	$ -	$ -	$ -	$ -	$ -	$ -	$ -
(4) Network Equipment/Cabling	$ -	$ -	$ -	$ -	$ -	$ -	$ -
(5) Other (Specify)	$ -	$ -	$ -	$ -	$ -	$ -	$ -
(6) *Miscellaneous*	$ -	$ -	$ -	$ -	$ -	$ -	$ -
(7) *Total Equipment and Miscellaneous Costs*	$ -	$ -	$ -	$ -	$ -	$ -	$ -
D. Project Contingency							
(1) 5% project contingency	$ -	$ -	$ -	$ -	$ -	$ -	$ -
E. Total Request							
Total Budget Request (A+B+C+D)	$ 22,463,333	$ 18,013,333	$ 4,450,000	$ -	$ -	$ -	$ -
F. Source of Funds							
GF	$ 3,461,333	$ 3,016,333	$ 445,000	$ -	$ -	$ -	$ -
CF	$ -	$ -	$ -	$ -	$ -	$ -	$ -
RF	$ -	$ -	$ -	$ -	$ -	$ -	$ -
FF	$ 19,002,000	$ 14,997,000	$ 4,005,000	$ -	$ -	$ -	$ -

Table 1.1: FY 2018-19 Summary by Component

Row	Component	Total Funds	General Fund	Capital Construction Fund	SIM Offset	Federal Funds	FFP	Source
A	eCQM Reporting Tools and Registry	$1,850,000	$0	$5,000	$1,800,000	$45,000	90%	Table 2, Row F
B	Health IT Portfolio Management	$500,000	$0	$33,000	$170,000	$297,000	90%	Table 2, Row I
C	Master Data Management (MPI/MPD)	$1,950,000	$0	$195,000	$0	$1,755,000	90%	Table 2, Row M
D	Data Governance Tools and Processes	$500,000	$0	$50,000	$0	$450,000	90%	Table 2, Row R
E	Automated and Integrated Consent	$250,000	$0	$25,000	$0	$225,000	90%	Table 2, Row W
F	Colorado Consumer Portal for Health	$1,350,000	$0	$1,350,000	$0	$0	0%	Table 2, Row AA
G	Advancing Colorado's State HIE Infrastructure	$1,125,000	$0	$112,500	$0	$1,012,500	90%	Table 2, Row AD
H	Technology Infrastructure for Care Coordination	$550,000	$0	$55,000	$0	$495,000	90%	Table 2, Row AI
I	Systems Integrator	$500,000	$0	$50,000	$0	$450,000	90%	Table 2, Row AL
J	**Total Project Funding Need**	**$8,575,000**	**$0**	**$1,875,500**	**$1,970,000**	**$4,729,500**	**NA**	**Sum of Rows A through I**
K	**Total Request**	**$6,605,000**	**$0**	**$1,875,500**	**$0**	**$4,729,500**	**NA**	**Row J - SIM Offset**

Table 1.2: Current Year FY 2019-20 Summary by Component

Row	Component	Total Funds	General Fund	Capital Construction	SIM Offset	Federal Funds	FFP	Source
A	eCQM Reporting Tools and Registry	$5,050,000	$0	$488,333	$166,667	$4,395,000	90%	Table 2, Row F
B	Health IT Portfolio Management	$0	$0	$0	$0	$0	90%	Table 2, Row I
C	Master Data Management (MPI/MPD)	$1,500,000	$0	$150,000	$0	$1,350,000	90%	Table 2, Row M
D	Data Governance Tools and Processes	$1,000,000		$100,000		$900,000	90%	Table 2, Row R
E	Automated and Integrated Consent	$1,000,000		$100,000		$900,000	90%	Table 2, Row W
F	Colorado Consumer Portal for Health	$0	$0	$0	$0	$0	0%	Table 2, Row AA
G	Advancing Colorado's State HIE Infrastructure	$1,125,000	$0	$112,500	$0	$1,012,500	90%	Table 2, Row AD
H	Technology Infrastructure for Care Coordination	$1,500,000	$0	$150,000	$0	$1,350,000	90%	Table 2, Row AI
I	Systems Integrator	$400,000	$0	$40,000	$0	$360,000	90%	Table 2, Row AL
J	**Total Project Funding Need**	**$11,575,000**	**$0**	**$1,140,833**	**$166,667**	**$10,267,500**	**NA**	**Sum of Rows A through I**
K	**Total Request**	**$11,408,333**	**$0**	**$1,140,833**	**$0**	**$10,267,500**	**NA**	**Row J - SIM Offset**

Table 1.3: Request Year FY 2020-21 Summary by Component

Row	Component	Total Funds	General Fund	Capital Construction	SIM Offset	Federal Funds	FFP	Source
A	eCQM Reporting Tools and Registry	$0	$0	$0	$0	$0	90%	Table 2, Row F
B	Health IT Portfolio Management	$0	$0	$0	$0	$0	90%	Table 2, Row I
C	Master Data Management (MPI/MPD)	$0	$0	$0	$0	$0	90%	Table 2, Row M
D	Data Governance Tools and Processes	$2,200,000	$0	$220,000	$0	$1,980,000	90%	Table 2, Row R
E	Automated and Integrated Consent	$750,000	$0	$75,000	$0	$675,000	90%	Table 2, Row W
F	Colorado Consumer Portal for Health	$0	$0	$0	$0	$0	0%	Table 2, Row AA
G	Advancing Colorado's State HIE Infrastructure	$0	$0	$0	$0	$0	90%	Table 2, Row AD
H	Technology Infrastructure for Care Coordination	$1,500,000	$0	$150,000	$0	$1,350,000	90%	Table 2, Row AI
I	Systems Integrator	$0	$0	$0	$0	$0	90%	Table 2, Row AL
J	**Total Project Funding Need**	**$4,450,000**	**$0**	**$445,000**	**$0**	**$4,005,000**	**NA**	**Sum of Rows A through I**
K	**Total Request**	**$4,450,000**	**$0**	**$445,000**	**$0**	**$4,005,000**	**NA**	**Row J - SIM Offset**

Table 1.4: FY 2021-22 Summary by Component

Row	Component	Total Funds	General Fund	Capital Construction	SIM Offset	Federal Funds	FFP	Source
A	eCQM Reporting Tools and Registry	$0	$0	$0	$0	$0	90%	Table 2, Row F
B	Health IT Portfolio Management	$0	$0	$0	$0	$0	90%	Table 2, Row I
C	Master Data Management (MPI/MPD)	$0	$0	$0	$0	$0	90%	Table 2, Row M
D	Data Governance Tools and Processes	$0	$0	$0	$0	$0	90%	Table 2, Row R
E	Automated and Integrated Consent	$0	$0	$0	$0	$0	90%	Table 2, Row W
F	Colorado Consumer Portal for Health	$0	$0	$0	$0	$0	0%	Table 2, Row AA
G	Advancing Colorado's State HIE Infrastructure	$0	$0	$0	$0	$0	90%	Table 2, Row AD
H	Technology Infrastructure for Care Coordination	$0	$0	$0	$0	$0	90%	Table 2, Row AI
I	Systems Integrator	$0	$0	$0	$0	$0	90%	Table 2, Row AL
J	**Total Project Funding Need**	**$0**	**$0**	**$0**	**$0**	**$0**	**NA**	**Sum of Rows A through I**
K	**Total Request**	**$0**	**$0**	**$0**	**$0**	**$0**	**NA**	**Row J - SIM Offset**

Table 2: Project Detail - Capital Construction - Initial Request

Row	Item	FY 2018-19	Current Year FY 2019-20	Request Year FY 2020-21	FY 2021-22	FFP	Source
A	**eCQM Reporting Tools and Registry**						
B	Technical Assitance Phase 1	$1,450,000	$1,450,000	$0	$0	90%	Estimates are from preliminary Deloitte assessment,
C	Technology DDI Phase 1	$400,000	$400,000	$0	$0	90%	including: Technical Assistance (200 practices x 70
D	Technical Assitance Phase 2	$0	$2,000,000	$0	$0	90%	hours x 100/hr= $1,400,000) DDI - development of
E	Technology DDI Phase 2	0	$1,200,000	$0	$0	90%	interfaces, configuration work, testing, user training
F	**Total**	**$1,850,000**	**$5,050,000**	**$0**	**$0**	**90%**	**Row B + Row C + Row D + Row E**
G	**Health IT Portfolio Management**						
H	Consulting and Contractors	$500,000	$0	$0	$0	90%	Two (2) Sr. Program Mgrs, 2000 hrs, 125/hr
I	**Total**	**$500,000**	**$0**	**$0**	**$0**	**90%**	**Row H**
J	**Master Data Management (MPI/MPD)**						
K	Software Licensing	$1,950,000	$0	$0	$0	90%	Software as a service for 2 use cases at $975,000
L	Implimentation	$0	$1,500,000	$0	$0	90%	each; implementation of $500,000 for 2 MPI use
M	**Total**	**$1,950,000**	**$1,500,000**	**$0**	**$0**	**90%**	**Row K + Row L**
N	**Data Governance Tools and Processes**						
O	Consulting and Advising	$500,000	$0	$0	$0	90%	Consulting: $250/hr for data scientists x 2000 hrs;
P	Software Licensing	$0	$1,000,000	$1,000,000	$0	90%	Licensing of terminoloy services x 2 at $500,000;
Q	Implimentation	$0	$0	$1,200,000	$0	90%	licensing of informatica at $1M; implemenation
R	**Total**	**$500,000**	**$1,000,000**	**$2,200,000**	**$0**	**90%**	**Row O + Row P + Row Q**
S	**Automated and Integrated Consent**						
T	Planning	$250,000	$0	$0	$0	90%	Planning at $165 hr x 1,515 hrs for requirements analys
U	Software Licensing	$0	$1,000,000	$0	$0	90%	Licensing at $500,000 x 2 HIEs
V	Implimentation	$0	$0	$750,000	$0	90%	Implementation at $375,000 x 2 HIEs
W	**Total**	**$250,000**	**$1,000,000**	**$750,000**	**$0**	**90%**	**Row T + Row U + Row V**
X	**Colorado Consumer Portal for Health**						
Y	Software Licensing	$150,000	$0	$0	$0	0%	$150,000 for Requirements analysis (Mosiaca)
Z	Development	$1,200,000	$0	$0	$0	0%	6,800 hrs development at $175/hr
AA	**Total**	**$1,350,000**	**$0**	**$0**	**$0**	**0%**	**Row Y + Row Z**
AB	**Advancing Colorado's State HIE Infrastructure**						
AC	Investment	$1,125,000	$1,125,000	$0	$0	90%	Software licensing and development expenses
AD	**Total**	**$1,125,000**	**$1,125,000**	**$0**	**$0**	**90%**	**Row AC**
AE	**Technology Infrastructure for Care Coordination**						
AF	Consulting and Advising	$550,000	$0	$0	$0	90%	Clinical planning/design at $200/hr x 2,750 hrs
AG	Software Licensing	$0	$1,500,000	$0	$0	90%	Licesing or development of resourced marketplace
AH	Implimentation	$0	$0	$1,500,000	$0	90%	Implementing and integrating systems
AI	**Total**	**$550,000**	**$1,500,000**	**$1,500,000**	**$0**	**90%**	**Row AF + Row AG + Row AH**
AJ	**Systems Integrator**						
AK	Software Licensing	$500,000	$400,000	$0	$0	90%	Consulting, licensing Mulesoft; interfaces
AL	**Total**	**$500,000**	**$400,000**	**$0**	**$0**	**90%**	**Row AK**
AM	**Total By Fiscal Year**	**$8,575,000**	**$11,575,000**	**$4,450,000**	**$0**	**N/A**	**Row F + Row I + Row M + Row R + Row W + Row AA + Row AD + Row AI + Row AL**
	Less SIM Funding	$1,970,000	$166,667	$0	$0		
	Total Project without SIM Funding	**$6,605,000**	**$11,408,333**	**$4,450,000**	**$0**		
	General Fund	$0	$0	$0	$0		
	Capital Contruction Funds	$1,875,500	$1,140,833	$445,000	$0		
	Federal Funds	$4,729,500	$10,267,500	$4,005,000	$0		

Table 3: Project Detail - Capital Construction - Paid Basis

Row	Item	FY 2018-19	Current Year FY 2019-20	Request Year FY 2020-21	FY 2021-22	FFP	Source
A	**eCQM Reporting Tools and Registry**						
B	Technical Assitance Phase 1	$250,000	$1,150,000	$350,000	$0	90%	Estimates based on current project pacing (8/2018)
C	Technology DDI Phase 1	$150,000	$400,000	$1,150,000	$0	90%	
D	Technical Assitance Phase 2	$0	$300,000	$600,000	$400,000	90%	
E	Technology DDI Phase 2	0	$0	$1,750,000	$400,000	90%	
F	**Total**	**$400,000**	**$1,850,000**	**$3,850,000**	**$800,000**	**90%**	**Row B + Row C + Row D + Row E**
G	**Health IT Portfolio Management**						
H	Consulting and Contractors	$75,000	$200,000	$200,000	$25,000	90%	Estimates from OIT, OeHI
I	**Total**	**$75,000**	**$200,000**	**$200,000**	**$25,000**	**90%**	**Row H**
J	**Master Data Management (MPI/MPD)**						
K	Software Licensing	$250,000	$1,250,000	$250,000	$0	90%	Estimates based on Verato option. Final vendor quotes needed; pacing/status as of 08/2018
L	Implimentation	$150,000	$500,000	$500,000	$550,000	90%	
M	**Total**	**$400,000**	**$1,750,000**	**$750,000**	**$550,000**	**90%**	**Row K + Row L**
N	**Data Governance Tools and Processes**						
O	Consulting and Advising	$250,000	$250,000	$250,000	$250,000	90%	Estimates from CORHIO's current costs for similar activities, and based on project pacing
P	Software Licensing	$250,000	$350,000	$700,000	$250,000	90%	
Q	Implimentation	$150,000	$250,000	$350,000	$400,000	90%	
R	**Total**	**$650,000**	**$850,000**	**$1,300,000**	**$900,000**	**90%**	**Row O + Row P + Row Q**
S	**Automated and Integrated Consent**						
T	Planning	$250,000	$0	$0	$0	90%	
U	Software Licensing	$0	$500,000	$500,000	$0	90%	
V	Implimentation	$0	$250,000	$250,000	$250,000	90%	
W	**Total**	**$250,000**	**$750,000**	**$750,000**	**$250,000**	**90%**	**Row T + Row U + Row V**
X	**Colorado Consumer Portal for Health**						
Y	Software Licensing	$150,000	$0	$0	$0	0%	Mosiaca contract for developing requirements
Z	Development		$600,000	$600,000	$0	0%	Estmated pacing of development, testing
AA	**Total**	**$150,000**	**$600,000**	**$600,000**	**$0**	**0%**	**Row Y + Row Z**
AB	**Advancing Colorado's State HIE Infrastructure**						
AC	Investment	$650,000	$950,000	$650,000	$0	90%	Based on pacing of work group efforts
AD	**Total**	**$650,000**	**$950,000**	**$650,000**	**$0**	**90%**	**Row AC**
AE	**Technology Infrastructure for Care Coordination**						
AF	Consulting and Advising	$125,000	$250,000	$175,000	$0	90%	Base on pacing of work group efforts
AG	Software Licensing	$0	$750,000	$750,000	$0	90%	
AH	Implimentation	$0	$250,000	$500,000	$750,000	90%	
AI	**Total**	**$125,000**	**$1,250,000**	**$1,425,000**	**$750,000**	**90%**	**Row AF + Row AG + Row AH**
AJ	**Systems Integrator**						
AK	Software Licensing	$75,000	$400,000	$425,000	$0	90%	Architecture work first in FY18/19
AL	**Total**	**$75,000**	**$400,000**	**$425,000**	**$0**	**90%**	**Row AK**
AM	**Total By Fiscal Year**	**$2,775,000**	**$8,600,000**	**$9,950,000**	**$3,275,000**	**N/A**	**Row F + Row I + Row M + Row R + Row W + Row AA + Row AD + Row AI + Row AL**
	Less SIM Funding	$1,970,000	$166,667	$0	$0		
	Total Project without SIM Funding	**$805,000**	**$8,433,333**	**$9,950,000**	**$3,275,000**		
	General Fund	$0	$0	$0	$0		
	Capital Contruction Funds	$80,500	$843,333	$995,000	$327,500		
	Federal Funds	$724,500	$7,590,000	$8,955,000	$2,947,500		

Table 4: Project Detail - Totals

Row	Item	FY 2018-19	Current Year FY 2019-20	Request Year FY 2020-21	FY 2021-22	Total by Project	Description
A	eCQM Reporting Tools and Registry	$1,850,000	$5,050,000	$0	$0	$6,900,000	TODAY: Limited capabilties for select practices to extract and report quality electronically; most practices reporting manually PROPOSED: Technical assistance and central system to electronically report clinical quality measures required Federally (MACRA) and by the State. Aimed to reduce physician burden of reporting quality measurement. Identified by OeHI and SIM stakeholders in as top priority. A broader deployment that could scale to the majority of interested physician practices and clinics statewide
B	Health IT Portfolio Management	$500,000	$0	$0	$0	$500,000	TODAY: No coordinated health IT PMO exists; duplication of efforts, inefficiences, lack of consistent methodology PROPOSED: A portfolio management office (PMO), specifically focused on HIT & HIE initiatives across Colorado, is needed to ensure that program deliverables are met, outcomes are achieved, and that resources have been used most efficiently. OIT's PMO does not currently manage these projects.
C	Master Data Management (MPI/MPD)	$1,950,000	$1,500,000	$0	$0	$3,450,000	TODAY: No statewide capabilities exist for person or provider identification PROPOSED: A statewide capability; these functions, that ensure correct patient- and provider-identification, would help to coordinate state services, reduce costs, improve the accuracy of new payment models, and improve the data quality in analytics services. Critical for new payment models and to understand cost and quality at a patient level.
D	Data Governance Tools and Processes	$500,000	$1,000,000	$2,200,000	$0	$3,700,000	TODAY: A statewide data governance board exists; tools and frameworks are emerging; limited resources available PROPOSED: Data governance is necessary for effectively implementing HIT/HIE projects. Currently, other than the State's Chief Data Officer, and the Governing Data Advisory Board (GDAB), there are no specific resources focused on the quality and accuracy of health data. Effective data governance is needed for all initiatives, in order to improve data quality, create trusted attribution models for payment reform, and provide data quality that most effectively supports both care delivery as well as health analytics
E	Automated and Integrated Consent	$250,000	$1,000,000	$750,000	$0	$2,000,000	TODAY: Colorado does not have standard consent forms, agreed upon interpretation of HIPAA and 42 CFR Part 2, nor an automated manner to know if a patient consents to sharing protected information with their provided. Hence, critical information is not shared. PROPOSED: This component is required to integrate physical and behavioral health to more cost-effectively treat the "whole person", and in support of the more vulnerable populations such as those with mental illness.
F	Colorado Consumer Portal for Health	$1,350,000	$0	$0	$0	$1,350,000	TODAY: Fragmented information exists in pockets; no comprehensive, integrated information source on cost and quality PROPOSED: Portal for consumers to view cost and quality data for health plan procedures. Consumers are asking for more information to make informed decisions on medical procedures. Opportunity to provide consumers with self-service and interactive resources to improve their health and health literacy, and to make informed, empowered decisions about their health and health care choices.
G	Advancing Colorado's State HIE Infrastructure	$1,125,000	$1,125,000	$0	$0	$2,250,000	TODAY: Colorado's Health Information Exchanges: Quality Health Network (QHN) on the western slope; and the Colorado Regional Health Information Organization (CORHIO) serving the front range, southern Colorado and eastern plains provide clinicians with health information on their patients. Most users have to "query", there is liminted clinical integration into the primary record; limited alerting PROPOSED: This is an opportunity to further align and enhance efforts of the two distinct organizations through standardization of data, refined systems, increased data storage, architecture integration, and leveraging this critical investment by not only the State and Federal partners but also health systems such as the University of Colorado and regional accountable care organizations such as Colorado Health Partnerships and Colorado Access for quality measurement and population health.
H	Technology Infrastructure for Care Coordination	$550,000	$1,500,000	$1,500,000	$0	$3,550,000	TODAY: There are no care coordination capabilities community- or state-wide; nor within the health information exchanges PROPOSED: Care coordination infrastructure and access to tools for clients and providers rose to the top of the list as a priority objective for Colorado to address through OeHI's Roadmap efforts. Care coordination includes communication, education, information sharing, care planning and care management activities that support health and prevention, and intercede with the appropriate level and location of care, when intervention is warranted. Without guidance and infrastructure alignment each practice, hospital, health system, and region will invest in their own system and process further fragmenting care.
I	Systems Integrator	$500,000	$400,000	$0	$0	$900,000	TODAY: No specific systems integrator designated to support these efforts, coordinating architecture and integration PROPOSED: A designated systems integrator to ensure project and technology architecture alignment, and optimal integration of information
J	**Total by Fiscal Year**	**$8,575,000**	**$11,575,000**	**$4,450,000**	**$0**	**$24,600,000**	

State Research to Support OeHI Budget Request

Research is primarily based on IAPD information. Due to the sensitive nature of the IAPD process, results have been blinded. Since each IAPD is different and each state takes a different approach, not all categories are identically aligned. Assumptions are made based on funding request and project descriptions. If other sources of information were used – it is noted. This document is a work in progress and will continue through the summer as additional sources of information are identified and vetted and as OeHI defines project metrics and expected outcomes.

Budget Request: eCQM Reporting Tools and Registry
Health IT Roadmap Domain: Technology

13 - Ease Quality Reporting Burden eCQM

State	Time Period	Dollars	Description	Impact/Outcome
State B	FFY19-20 for HITECH FFY18-19 for MMIS	Personnel - $375,000 Vendor - $4,700,000 (split between HITECH and MMIS)	*Clinical Quality Metrics Registry (CQMR)* A collection and analysis initiative to support Meaningful Use. Both the Medicaid enterprise and the Medicaid Promoting Interoperability Program need to collect clinical quality measures from Medicaid providers. The Agency is implementing a solution for the CQMR to support collection and analysis of measures data. The CQMR will be used to: • Support the State's Medicaid Coordinated Care Organization (CCO) Incentive Metrics/Pay for Performance Program by collecting clinical measure data to calculate CCO Quality Pool and Challenge Pool payment eligibility • Provide data to CCOs to improve CCO access to clinical quality measure data for analytics/quality • Support the Medicaid Promoting Interoperability Program by collecting measure data to meet the requirement that EPs report six electronic clinical quality measures (eCQMs)	The Provider Directory, Clinical Quality Metrics Registry, and other HIT initiatives, including the HIT/HIE strategic planning initiative, have been identified to support healthcare transformation. The overall benefits of the State's HIT initiatives as critical components to support the State's transformed health care system are a combination of benefits in healthcare achieved through coordinated care and the principles of PCPCH. Over the course of the initial five-year demonstration, those benefits have yielded millions of dollars of savings to CMS and the State, as well as contributed to improving the quality of care that all citizens receive. Efforts to expand HIE and offer baseline services are prioritizing and supporting critical service providers; including safety net clinics, rural providers, and equity-focused organizations. The Provider Directory will include information about providers

IN PROGRESS

			• Reduce administrative burdens on providers by streamlining reporting The CQMR is expected to provide benefits by: • Improving data transparency and availability • Decreasing administrative burden of data collection and reporting Enabling a 'report once' strategy to streamline reporting requirements among multiple quality programs	regarding languages spoken, cultural competency, and disability access. HIT can also support health equity with efforts such as telehealth and telemedicine that can expand access to underserved areas and populations. Improving data collection on patient-level characteristics and outcomes can also identify health disparities among specific populations, monitor interventions, and guide policymakers' action.
State B		New Initiative – Not Priced in the IAPD	*eCQM Collection* The Agency is requesting funding to provide technical assistance (TA) and guidance to primary care practices to produce reliable, accurate eCQM reports using the QRDA III standard, and to improve these metric performance rates. In addition, the TA will support the implementation of workflows and the integration of HIE with EHRs to improve transition of care and reduce hospital readmissions. The State's primary care providers report eCQMs for programs including the Medicaid EHR Incentive Program, Coordinated Care Organization quality incentives, CPC+, and MIPS. Through the use of EHR Technology and the HIE, Eligible Professionals will have improved success in meeting the following Promoting Interoperability Objectives: Coordination of Care through Patient Engagement and Health Information Exchange.	

IN PROGRESS

14 - Uniquely Identify a Person Across System
15 - Unique Provider Identification and Organizational Affiliations

State	Time Period	Dollars (total state and federal)	Description	Impact/Outcome
State A	FFY19	No System Cost Personnel: $200,000	*Master Client Index* Funding to support the continued design, development, and implementation of modifications to the statewide MCI to improve activities for EPs and EHs trying to achieve meaningful use across the state. Development of the MCI will provide short and long-term value to providers by reducing de-duplication of client data. An enhanced MCI will support creation of a unique client identifier for each individual. This will allow correlation of all known instances of client data and records for each client. The requested funding will support the cost of state personnel and resources to develop requirements and synchronize the Department's MCI to the HIE Master Patient Index (eMPI) to provide a more robust demographic source of data for the HIE eMPI and provide new data or updated demographic information from the HIE to the Department's MCI.	Development of the MCI will provide short and long-term value to providers by reducing de-duplication of client data. An enhanced MCI will support creation of a unique client identifier for each individual. This will allow correlation of all known instances of client data and records for each client . . . This project is critical for improving coordination of care through the HIE.
State B	FFY20-21	$5,000,000	*Provider Directory* The State is requesting HITECH HIT funding for assistance to support and manage the design, development, and implementation of the Provider Directory initiative. Today, the State's Medicaid enterprise and healthcare entities use many data sources to support and manage provider directories. Provider directories are not interoperable, limited in accuracy and scope, and costly to maintain. New provider directories have highlighted the current problems with provider data and emphasized the need for an accurate provider data resource. Meaningful Use health information exchange and coordination of care objectives require finding contact and Direct secure	The Provider Directory, Clinical Quality Metrics Registry, and other HIT initiatives, including the HIT/HIE strategic planning initiative, have been identified to support healthcare transformation. The overall benefits of the State's HIT initiatives as critical components to support the State's transformed health care system are a combination of benefits in healthcare achieved through coordinated care and the principles of PCPCH. Over the course of the initial five-year demonstration, those benefits have yielded millions of dollars of savings to CMS and the State, as well as contributed

IN PROGRESS

			messaging information for providers that may or may not be within an eligible professional's or hospital's proprietary health directory. The Agency is developing a state-level Provider Directory that will begin implementation in 2019. It will leverage data from existing, trusted data sources, and align to established provider directory standards enabling an interoperable solution. The directory will serve Medicaid and external entities with a technical solution and data validation/management services that will: • Improve operational efficiencies • Improve availability and accuracy of information needed for care coordination, health information exchange, and meet meaningful use objectives • Improve data for health care analysis • In addition to supporting meaningful use, the Provider Directory will support care coordination and transition of care; specifically, care coordinators in behavioral health, social service, corrections, and long-term care settings.	to improving the quality of care that all citizens receive. Efforts to expand HIE and offer baseline services are prioritizing and supporting critical service providers; including safety net clinics, rural providers, and equity-focused organizations. The Provider Directory will include information about providers regarding languages spoken, cultural competency, and disability access. HIT can also support health equity with efforts such as telehealth and telemedicine that can expand access to underserved areas and populations. Improving data collection on patient-level characteristics and outcomes can also identify health disparities among specific populations, monitor interventions, and guide policymakers' action.
State C	Three Years	$450,000 Personnel Costs for a SME	*Develop Clinical Quality Reporting Strategy* The agency is ***requesting new*** resources to engage a subject matter expert on electronic clinical quality (eCQM) reporting based on the Agency's MITA Self-Assessment results. The agency needs to develop its short term and longer-term clinical quality management and oversight strategy which includes consideration of the electronic clinical data that is available from the HIE.	

IN PROGRESS

12 - Statewide Health Information Technical Architecture

State	Time Period	Dollars	Description	Impact/Outcome
State A	FFY19	$10,812,500	Funding to support the continued enhancement and provider onboarding activities to the statewide HIE. The projects have been designed to meet the following goals and desires for the statewide HIE: • Support the HIE's operational needs, including staffing, contract resources, administrative expenses, and technology expenses to support operations and ongoing maintenance of the HIE • Provide technical assistance to support HIE onboarding and implementation within provider organizations who are meaningful use-eligible and who refer directly with tribal organizations • Develop tools and HIE interfaces that support enhanced care coordination services, and increase HIE value to ensure sustainability beyond current funding streams *Should be noted that specific projects are not broken out.*	The success of the statewide HIE is critical for improving data exchange, coordination of care, and modernizing healthcare across the State. The following funding requests are for projects that will provide enhanced technical capabilities to providers, support providers in onboarding, support modernizations required for Medicaid redesign, and ensure sustainability beyond State of Alaska and CMS funding.
State C	Two Years	$9,300,000	Specific Projects are not indicated – planning on implementing "value-add" services	Through better information and care coordination the State hopes to meet the CMS goals of: meeting MU, improving care, reducing costs, and improving patient outcomes. Longer term in the State, all of the community participants want to see a more robust longitudinal record for their Medicaid members to improve care efforts among high risk members that need care management. As the variety of data sources has increased and other elements such as medications, radiology images, Social Determinants of Health factors, and Behavioral health information is

IN PROGRESS

				becoming more available, providers use of the HIE and satisfaction with the HIE is expected to keep increasing.
State B		New Initiative – Not Priced in the IAPD $5,000,000 (this was an overall investment by the legislature in Public Health Modernization)	As part of their Public Health Modernization, Electronic Lab Reporting (which is an HIE investment for CO) is included to support registry functionality	Support achieving the following goals: 1. Enhancing interoperability of public health systems 2. Improving the long-term sustainability of statewide public health initiatives 3. Support reporting to Public Health and Clinical Data registries
State D		$3,300,000	Two matching grants from the Office of National Coordinator to help promote the adoption of notification services, consumer engagement tools, care summary exchange, and much more (grants funded 2015-2017).	

IN PROGRESS

Budget Request: Technology Infrastructure for Care Coordination
Health IT Roadmap Domain: Stakeholder Engagement

01 - Support Care Coordination in Communities Statewide

State	Time Period	Dollars	Description	Impact/Outcome
State A	FFY19	Not broken out separately from the $10,812,500 overall HIE request	*Integration of SDoH Information* Seeking funds to support the integration of the Social Determinants of Health into the statewide HIE system which will improve coordination of care and information exchange across the state. This is an important and practical step to help the healthcare delivery system build effective, coordinated, data-driven healthcare services into communities hit hardest by social structures and economic systems. The integration of social determinants of health data will provide support for addressing social determinants of health drivers in the State and will identify ways to improve intervention using Social Determinants of Health as part of a comprehensive coordinated care model impacting payment, incentivizing purposeful intervention in the specific needs of their patients and populations to improve health outcomes. To complete the scope of work, the HIE will integrate a limited CDR and interface to the network as well as provide onboarding services to connect Medicaid providers.	The integration of social determinants of health data will provide support for addressing social determinants of health drivers in the State and will identify ways to improve intervention using Social Determinants of Health as part of a comprehensive coordinated care model impacting payment, incentivizing purposeful intervention in the specific needs of their patients, and populations to improve health outcomes.
State B	FFY20-21	No System Cost Personnel $470,000	*Statewide Screening and Referral Infrastructure* System to address health-related social needs of Medicaid members. This is a critical piece of a broader agency strategy to address the Social Determinants of Health (SDOH) as part of health system transformation. SDOH are non-clinical factors, economic and social, that profoundly impact health. Currently, there is not an effective way to assess and address	SDOH screening in primary care settings could improve health care teams' ability to understand the 'upstream' factors impacting their patients' health and ability to act on care recommendations. An effective, closed loop referral infrastructure could further enable providers to address the health-related social needs that are impacting the health of their patients. It could

IN PROGRESS

			health-related social needs that stem from SDOH in the community. The work relative to health-related social needs is occurring primarily at the provider/patient level at the point of care where the potential for collection of this data occurs. At the State level, there is interest in not only the collection of this data but also the sharing or exchange of the data, as in HIEs. The Agency is interested in the data for the purpose of quality improvement and population health initiatives, specifically in the Medicaid population. The Agency's objective is to have infrastructure in place to support screening, assessment, and intervention around health-related social needs and SDOH, including: 1) electronic screening of Medicaid members for social factors 2) electronic closed loop referrals to address health-related social needs 3) data on SDOH outcomes, community indicators, and resource needs 4) a sustainable funding model statewide to support screening and referral	also inform the provision and funding of community resources by providing data showing the need for such services.
State A	FFY19	$8,000,000	*Modular Care Management Solution* The Department of Health and Social Services is requesting funding for the design, development, and implementation of a robust, modular care management solution to support the care and services provided.. This solution will be designed and implanted through contracting within the statewide Health Information Exchange to take advantage of other service offerings provided by the statewide Health Information Exchange.	This solution will allow Department of Health and Social Services to be more efficient in treating the patients we serve across multiple divisions and will allow the patient's healthcare record to more easily follow their care in a secure, electronic manner. In turn, this will support coordination of care for patients receiving services by various entities.

IN PROGRESS

04 – Integrate Behavioral, Physical, Claims, Social and Other Health Data (Systems Integration)

State	Time Period	Dollars	Description	Impact/Outcome
State B	FFY20		The Agency is using the services of a systems integrator/prime vendor who will ensure the Provider Directory and Clinical Quality Metrics Registry (CQMR) COTS solutions apply a robust SDLC and associated artifacts and processes to all software development, configuration, and implementation.	The Provider Directory, Clinical Quality Metrics Registry, and other HIT initiatives, including the HIT/HIE strategic planning initiative, have been identified to support healthcare transformation. The overall benefits of the State's HIT initiatives as critical components to support the State's transformed health care system are a combination of benefits in healthcare achieved through coordinated care and the principles of PCPCH. Over the course of the initial five-year demonstration, those benefits have yielded millions of dollars of savings to CMS and the State, as well as contributed to improving the quality of care that all citizens receive. Efforts to expand HIE and offer baseline services are prioritizing and supporting critical service providers; including safety net clinics, rural providers, and equity-focused organizations. The Provider Directory will include information about providers regarding languages spoken, cultural competency, and disability access. HIT can also support health equity with efforts such as telehealth and telemedicine that can expand access to underserved areas and populations. Improving data collection on patient-level characteristics and outcomes can also identify health disparities among specific populations, monitor interventions, and guide policymakers' action.

IN PROGRESS

State A	FFY19	$900,000	Design, Development, and Implementation of interface between the State's MMIS and the State's HIE to share claims data (not a stated SI or ESB)	
State A	FFY19	Approx. $600,000	Technical architecture design and development efforts for designing, implementing, and maintaining services integrations leveraging resources such as the MCI, MPI, and state HIE along with other DHSS Business Systems (and analysts). A total of six positions requested.	

Budget Request: Health IT Portfolio Management
Health IT Roadmap Domain: Governance

06 - Health IT Portfolio/Program Management

State	Time Period	Dollars	Description	Impact/Outcome
State B	FFY20	Total Personnel Costs: Approx $778,000	Classified as the HIT Project Team but functions are related to project management: • Oversees & manages all planning, preparation, & operational components of programs • Provides project management related to vendor management, DDI, risks & issues, development, testing, & planning & preparation • Provides coordination for projects related to all aspects of PMO, vendor management, DDI, planning, & preparation (2) • Provides systems analysis for projects related to all aspects of PMO, vendor management, DDI, planning, & preparation • Provides program and policy analysis to support planning & preparation; policy & rule development & updates; software requirements & design; data analysis; & program/stakeholder outreach	

IN PROGRESS

Literature Review on the Impact of Health IT Programs

With the growing prevalence of health IT services, the fundamental importance of delivering healthcare has become more apparent. In today's society there are many opportunities to improve medical services via hospitals and doctors through the use of electronic health records. By allowing access to patient records across providers, the quality and cost of care are greatly improved and accurate information is available for all patients allowing for more efficient and effective care.

More specifically, Medicaid agencies are tasked with the effective management of the complex medical care needed by their beneficiaries without limiting or cutting benefits. Data generated through these technologies will provide a range of research opportunities that can further inform and advance improvements in health care quality and efficiency.[5] For Medicaid agencies, electronic health information exchange has been shown to reduce redundancies by catching duplicate tests, examinations, or procedures for patients, and inflated costs by erroneous or deliberately fraudulent billing. The money that is saved by preventing redundancies and fraud can be applied to further healthcare services and resources and improved patient care, while reducing costs for insurers, program administrators, and the federal government.[6]

In one example, the cost benefits associated with the various services and initiatives included under the broad umbrella of Health IT ranged from a reduction in avoided hospital admissions and radiology services totalling $283,477[1] over a four month period, to 771 fewer bed days per 1,000 members[3] and reduced average length of stay with the odds of admission being 30 percent lower when the system was accessed[4]. Utilization of Health IT has also been shown to reduce emergency room testing upwards of 67 percent.[2] Savings in the emergency room for the Medicare population was found to be in excess of $1 million dollars in patient charges or nesarly $2,000 per patient.[8]

In addition, health IT can also serve as a vehicle for information sharing during times of disaster. For example, in the wake of Hurricane Harvey, Texas witnessed the power of information sharing during this incredibly challenging natural disaster.[7] Health IT was essential in helping to track the location of patients who sought medical attention and providing them accurate and timely care.

As payors look towards new care models and new payment models, Health IT provides the infrastructure necessary to support innovation. A successful transition to value-based care will require effective partnerships between healthcare providers and health IT developers as well as among providers themselves to ensure that current and future EHR and health IT infrastructure lead to improved care delivery.[10]

Health care delivery is arguably the most complex industry in existence but Information technology has transformative power. Health IT can accelerate processes and make them less error-prone and more efficient. It can offer new services that overcome distance, time and the need for a physical structure, such as a storefront. It can deliver information instantly and in novel ways to decision-makers. And it can run algorithms to monitor equipment and correct minor problems before they become major problems. The opportunities afforded through Health information technology (IT) has the potential to improve the health of individuals and the performance of providers, yielding improved quality, cost savings, and greater engagement by patients in their own health care.[9]

Health Information Exchange

1. ***The Financial Impact of Health Information Exchange on Emergency Department Care***
   https://www.ncbi.nlm.nih.gov/pubmed/22058169
   OBJECTIVE:
   To examine the financial impact of health information exchange (HIE) in emergency departments (ED).
   MATERIALS AND METHODS:
   We studied all ED encounters over a 13-month period in which HIE data were accessed in all major emergency departments in Memphis, Tennessee. HIE access encounter records were matched with similar encounter records without HIE access. Outcomes studied were ED-originated hospital admissions, admissions for observation, laboratory testing, head CT, body CT, ankle radiographs, chest radiographs, and echocardiograms. Our estimates employed generalized estimating equations for logistic regression models adjusted for admission type, length of stay, and Charlson co-morbidity index. Marginal probabilities were used to calculate changes in outcome variables and their financial consequences.
   RESULTS:
   HIE data were accessed in approximately 6.8 percent of ED visits across 12 EDs studied. In 11 EDs directly accessing HIE data only through a secure Web browser, access was associated with a decrease in hospital admissions (adjusted odds ratio (OR)=0.27; p<0001). In a 12th ED relying more on print summaries, HIE access was associated with a decrease in hospital admissions (OR=0.48; p<0001) and statistically significant decreases in head CT use, body CT use, and laboratory test ordering.
   DISCUSSION:
   Applied only to the study population, HIE access was associated with an annual cost savings of $1.9 million. Net of annual operating costs, HIE access reduced overall costs by $1.07 million. Hospital admission reductions accounted for 97.6 percent of total cost reductions.
   CONCLUSION:
   Access to additional clinical data through HIE in emergency department settings is associated with net societal saving.

2. ***Health Information Exchange Saves $1 Million in Emergency Care Costs for Medicare***[8]
   http://newsroom.acep.org/2013-10-14-Health-Information-Exchange-Saves-1-Million-in-Emergency-Care-Costs-for-Medicare
   New research shows that having access to data from a health information exchange (HIE) improved the quality of emergency care and saved more than $1 million in patient charges, or nearly $2,000 per patient, according to a study presented in Seattle at the annual meeting of the American College of Emergency Physicians.

3. ***Observational Study and Estimate of Cost Savings from Use of a Health Information Exchange in an Academic Emergency Department***[1]
   https://www.ncbi.nlm.nih.gov/pubmed/24071033
   BACKGROUND:
   Federal initiatives to improve health care information sharing have led to the development of a new type of regional electronic medical record known as a health information exchange (HIE).
   OBJECTIVE:
   To investigate the ability of an HIE to decrease health services use for emergency department (ED) patients.

METHODS:

An observational, prospective study was performed using a voluntary, anonymous survey among clinicians at an urban academic ED. All ED clinicians were eligible to participate. Survey items addressed clinician perception of whether information from the HIE avoided the use of hospital resources, improved quality of care, and reduced length of stay (LOS). Cost savings were estimated by multiplying the number of services the clinicians completing the survey reported they avoided through use of the HIE by the costs of those services at our facility. The study was approved by the Institutional Review Board at the study site.

RESULTS:

The study was conducted between August and December of 2011. There were 18,529 patient encounters during the study period and 60 clinicians at the study site who were eligible to participate. The clinicians consulted the HIE for 5.39 percent of these encounters (998 patients). Surveys were completed by the clinicians caring for 13.8 percent (n = 138) of these patients. Of the completed surveys, 76 percent (105 surveys) referenced patients for whom the HIE was found to contain information on the patient under care by the clinician participant. These 105 patients formed the sample on which our analysis was based. Within this sample of patients, the following studies were reported to have been avoided by the clinicians participating in our survey: values are percent of patients for whom a study was reported to have been avoided (actual number of studies avoided): laboratory/microbiology: 30.5 percent (32 studies); radiologic studies: 47.6 percent (50 studies); consultations: 19 percent (20 consultations); and admissions: 11.4 percent (12 admissions). Calculated cost savings based on these estimates were as follows: laboratory/microbiology: $462.85; radiologic studies: $160,893.00; consultations: $3,990.00; and admissions: $118,131.84. Total savings: $283,477. Clinicians participating in the study reported improved quality of care for 86.7 percent of their patients, as well as a mean time savings of 120.8 minutes.

CONCLUSIONS:

According to clinician estimates, use of an HIE in this urban academic ED resulted in reduced use of hospital resources, noteworthy cost savings, decreased LOS, and improved quality of care. Limitations included the observational nature of the study, selection bias, the Hawthorne effect, and cost estimates being from a single institution. Allowance was not made for additional services used because of information obtained from the HIE.

4. ***Association Between Use of a Health Information Exchange System and Hospital Admissions***[4]
https://www.ncbi.nlm.nih.gov/pmc/articles/PMC3974257

OBJECTIVE:

Relevant patient information is frequently difficult to obtain in emergency department (ED) visits. Improved provider access to previously inaccessible patient information may improve the quality of care and reduce hospital admissions. Health information exchange (HIE) systems enable access to longitudinal, community-wide patient information at the point of care. However, the ability of an HIE to avert admissions is not well demonstrated. We sought to determine if HIE system usage is correlated with a reduction in admissions via the ED.

METHODS:

We identified 15,645 adults from New York State with an ED visit during a 6-month period, all of whom consented to have their information accessible in the HIE system, and were continuously enrolled in two area health plans. Using claims, we determined if the ED encounter resulted in an admission. We used the HIE's system log files to determine usage during the encounter. We determined the association between HIE system use and the likelihood of admission to the hospital from the ED and potential cost savings.

RESULTS:

The HIE system was accessed during 2.4 percent of encounters. The odds of an admission were 30 percent lower when the system was accessed after controlling for confounding (odds ratio = 0.70; 95%C I= 0.52, 0.95). The annual savings in the sample was $357,000.

CONCLUSION:

These findings suggest that the use of an HIE system may reduce hospitalizations from the ED with resultant cost savings. This is an important outcome given the substantial financial investment in interventions designed to improve provider access to patient information in the U.S.

5. ***Health Information Exchange, Health Information Technology Use, and Hospital Readmission Rates***
https://www.ncbi.nlm.nih.gov/pubmed/22195120

The Health Information Technology for Economic and Clinical Health (HITECH) Act of 2009 offers significant financial incentives to hospitals that can demonstrate "meaningful use" of EHRs. Reduced hospital readmissions are an expected outcome of improved care coordination. Increased use of HIT, and, in particular, participation in HIE are touted as ways to improve coordination of care. In a 2007 national sample of U.S. hospitals, we evaluated the association between hospitals' HIE and HIT use and 30-day risk adjusted readmission rates for acute myocardial infarction (AMI), heart failure, and pneumonia. We found that hospital participation in an HIE was not associated with lower hospital readmission rates; however, high levels of electronic documentation (an aspect of HIT use) were associated with modest reductions in readmission for heart failure (24.6 percent vs. 24.1 percent P=.02) and pneumonia (18.4 percent vs. 17.9 percent, P=.003). More detailed data on participation in HIE are necessary to conduct a more robust assessment of the relationship between HIE and hospital readmission rates.

6. ***Does Health Information Exchange Reduce Redundant Imaging? Evidence from Emergency Departments***[2]
https://www.ncbi.nlm.nih.gov/pubmed/24374414

BACKGROUND:

Broad-based electronic health information exchange (HIE), in which patients' clinical data follow them between care delivery settings, is expected to produce large quality gains and cost savings. Although these benefits are assumed to result from reducing redundant care, there is limited supporting empirical evidence.

OBJECTIVE:

To evaluate whether HIE adoption is associated with decreases in repeat imaging in emergency departments (ED).

DATA SOURCE/STUDY SETTING:

ED discharge data from the State Emergency Department Databases for California and Florida for 2007-2010 were merged with Health Information Management Systems Society data that report hospital HIE participation.

METHODS:

Using regression with ED fixed effects and trends, we performed a retrospective analysis of the impact of HIE participation on repeat imaging, comparing 37 EDs that initiated HIE participation during the study period to 410 EDs that did not participate in HIE during the same period. Within three common types of imaging tests [computed tomography (CT), ultrasound, and chest x-ray], we defined a repeat image for a given patient as the same study in the same body region performed within 30 days at unaffiliated EDs.

RESULTS:

In our sample, there were 20,139 repeat CTs (representing 14.7 percent of those cases with CT in the index visit), 13,060 repeat ultrasounds (20.7 percent of ultrasound cases), and 29,703 repeat chest x-rays (19.5

percent of x-ray cases). HIE was associated with reduced probability of repeat ED imaging in all three modalities: -8.7 percentage points for CT [95% confidence interval (CI): -14.7, -2.7], -9.1 percentage points for ultrasound (95% CI: -17.2, -1.1), and -13.0 percentage points for chest x-ray (95% CI: -18.3, -7.7), reflecting reductions of 44 percent - 67 percent relative to sample means.

CONCLUSIONS:

HIE was associated with reduced repeat imaging in EDs. This study is among the first to find empirical support for this anticipated benefit of HIE.

7. ***"Hidden" Value: How Indirect Benefits of Health Information Exchange Further Promote Sustainability***[3]
https://www.ncbi.nlm.nih.gov/pmc/articles/PMC4031695

BACKGROUND:

Health information exchanges (HIE) have already demonstrated direct value in controlling the costs associated with utilization of emergency department services and with inpatient admissions from the emergency department. HIEs may also affect inpatient admissions originating from outside of the emergency department.

OBJECTIVE:

To assess if a potential association exists between a community-based HIE being used in hospital emergency departments and inpatient admissions emanating from outside of the emergency department.

METHODS:

The study design was observational, with an eligible population of fully insured plan members who sought emergency department care on at least two occasions over the study period between December 2008 and March 2010. Utilization data, obtained from medical and pharmacy claims, were matched to a list of emergency department utilizers where HIE querying could have occurred. Of the eligible members, 1,482 underwent propensity score matching to create two 325-member groups— (1) a test group in which the HIE database was queried for all members in all of their emergency department visits, and (2) a control group in which the HIE database was not queried for any of the members in any emergency department visit.

RESULTS:

A post–propensity matching analysis showed that although the test group had more admissions per 1,000 members overall (199 more admissions per 1,000 members) than the control group, these admissions might have been more appropriate for inpatient treatment in general. The relative risk of an admission by the time of a first emergency department visit was 28 percent higher in the control group than the test group, although by the time of a second emergency department visit, it was only 8 percent lower in the control group. Moreover, test group admissions resulted in less time spent as inpatients, which was denoted by bed days per 1,000 members (771 fewer bed days per 1,000 members) and by average length of stay (4.27 days per admission for all admissions and 0.95 days per admission when catastrophic cases were removed).

8. ***Health Information Exchange and Ambulatory Quality of Care***
https://www.ncbi.nlm.nih.gov/pubmed/23646072

BACKGROUND:

Health information exchange is a national priority, but there is limited evidence of its effectiveness.

OBJECTIVE:

To determine the effect of health information exchange on ambulatory quality.

METHODS:

We conducted a retrospective cohort study over two years of 138 primary care physicians in small group practices in the Hudson Valley region of New York State. All physicians had access to an electronic portal, through which they could view clinical data (such as laboratory and radiology test results) for their patients over time, regardless of the ordering physician. We considered 15 quality measures that were being used by the community for a pay-for-performance program, as well as the subset of eight measures expected to be affected by the portal. We adjusted for 11 physician characteristics (including health care quality at baseline).

RESULTS:

Nearly half (43 percent) of the physicians were portal users. Non-users performed at or above the regional benchmark on 48 percent of the measures at baseline and 49 percent of the measures at follow-up ($p = 0.58$). Users performed at or above the regional benchmark on 57 percent of the measures at baseline and 64 percent at follow-up ($p<0.001$). Use of the portal was independently associated with higher quality of care at follow-up for those measures expected to be affected by the portal ($p = 0.01$), but not for those not expected to be affected by the portal ($p = 0.12$).

CONCLUSIONS:

Use of an electronic portal for viewing clinical data was associated with modest improvements in ambulatory quality.

9. ***Hospitalization Event Notifications and Reductions in Readmissions of Medicare fee-for-service Beneficiaries in the Bronx, New York***
https://academic.oup.com/jamia/article-abstract/24/e1/e150/2907910/Hospitalization-event-notifications-and-reductions?redirectedFrom=PDF

OBJECTIVE:

Follow-up with a primary care provider after hospital discharge has been associated with a reduced likelihood of readmission. However, primary care providers are frequently unaware of their patients' hospitalizations. Event notification may be an effective tool for reducing readmissions by notifying primary care providers when their patients have been admitted to and discharged from a hospital.

MATERIALS AND METHODS:

We examined the effect of an event notification system on 30-day readmissions in the Bronx, New York. The Bronx has among the highest readmission rates in the country and is a particularly challenging setting to improve care due to the low socioeconomic status of the county and high rates of poor health behaviors among its residents. The study cohort included 2,559 Medicare fee-for-service beneficiaries associated with 14 141 hospital admissions over the period January 2010 through June 2014. Linear regression models with beneficiary-level fixed-effects were used to estimate the impact of event notifications on readmissions by comparing the likelihood of rehospitalization for a beneficiary before and after event notifications were active.

RESULTS:

The unadjusted 30-day readmission rate when event notifications were not active was 29.5 percent compared to 26.5 percent when alerts were active. Regression estimates indicated that active hospitalization alert services were associated with a 2.9 percentage point reduction in the likelihood of readmission (95% confidence interval: −5.5, −0.4).

CONCLUSION:

Alerting providers through event notifications may be an effective tool for improving the quality and efficiency of care among high-risk populations.

10. ***The Benefits of Health Information Exchange Platforms: Measuring the Returns on a Half a Billion Dollar Investment***
https://www.brookings.edu/wp-content/uploads/2016/06/hie_returns.pdf
To have a clear understanding about the benefits of HIE platforms, the volume of available data and the investments by medical providers to meaningfully engage in HIE should be taken into account. This is the first study in which access to an HIE platform was provided to all of the patients in a treatment group, while the care of the others in the control group did not include querying an HIE platform. Moreover, due to the high participation rate of providers of medical data, a relatively comprehensive medical history of patients was available on the RHIO's database. Due to this feature of the trial design, endogeneity and confounding effects are avoided and thus a causal link between querying RHIO's database and outcome measures can be established. According to this analysis, querying RHIO's database is associated with significant utilization reduction in ED settings. In the first ED setting, querying RHIO's database is associated with respectively, a 25 percent and 26 percent reduction in the estimated number of laboratory tests and radiology examinations. In the second ED setting, querying RHIO's database is associated with a 47 percent reduction in the estimated number of radiology examinations.

Fraud and Abuse

11. ***How Electronic Health Information Exchange (HIE) Can Reduce Health-Care Fraud***[6]
https://medium.com/@ElizabethKStepp/how-electronic-health-information-exchange-hie-can-reduce-health-care-fraud-213a253ab252
Overall for the American health-care system, electronic health information exchange has been shown to reduce redundancies by catching duplicate test, examination, or procedures for patients, and inflated costs by erroneous or deliberately fraudulent billing. The money that is saved by preventing redundancies and fraud can be applied to furthering health-care services and resources, improving patient care, while reducing costs for insurers, program administrators and the federal government. It is a system that will save costs, and provide efficiency that enables the health-care system in the United States to serve more patients, with better quality care.

12. ***Clinical Health Information Technologies and the Role of Medicaid***[5]
https://www.ncbi.nlm.nih.gov/pmc/articles/PMC4194977
Medicaid agencies pay for health care services for the poorest, sickest, and most complex populations in the U.S. The benefits associated with the appropriate use of HIT and HIE offer significant promise for Medicaid agencies to ensure the effective management of the complex medical care needed by their beneficiaries without limiting or cutting benefits. In addition, data generated through these technologies will provide a range of research opportunities that can further inform and advance improvements in health care quality and efficiency.

There are many areas where Medicaid represents a natural leverage point for a national HIT strategy. Its disproportionate influence in certain provider settings, its position as one of the largest purchasers of health care in the nation, the significant IT investments made through the MMIS, and most importantly, its role in supporting the health and well-being of U.S. citizens in need, positions Medicaid as a key player in facilitating the universal adoption and appropriate use of HIT and HIE. With consistent support and leadership from Federal and State

policymakers, Medicaid can be an important contributor to a national health information infrastructure that will support safer, higher quality health care, and better health outcomes for all.

Natural and/or Man Made Disasters

13. **Evaluation of State Health Information Exchange Cooperative Agreement Program; Case Study Report: Experiences from Texas in Enabling Health Information Exchange (HIE)**
    https://www.healthit.gov/sites/default/files/tx_casestudyreport_final.pdf
    Conclusion:
    The geographical makeup and diversity of Texas have greatly contributed to the development of a three-pronged, market-based approach to the state's Cooperative Agreement Program. The THSA funds 12 local HIOs throughout the state, allowing them to provide services based on the needs of their individual communities. HIOs are encouraged to engage with a wide variety of key stakeholders in their regions, particularly with large health systems, to ensure the services they provide are creating a value-add for both market relevance and sustainability. Additionally, Texas's white space program provides an innovative solution to tackle the issue of connecting providers in the vast rural regions of "white space" and helping them meet MU requirements. While the future of the Local HIE Grant Program seems promising, as of March 2012, the white space program was not seeing demand from providers.

    The state has delayed offering state-level services so they can focus on bolstering and expanding local HIO efforts. Given the size and diversity of the healthcare market in Texas, the state's approach has strong support from stakeholders; however, the future of the state's role in HIE and the sustainability of the HIOs remains uncertain. Changing dynamics in the healthcare market and in state and federal legislation have shifted the traditional relationships between hospitals and ambulatory providers. The creation of Nonprofit Health Corporations, to bypass the prohibition on the corporate practice of medicine, allows the creation of networks of hospitals and ambulatory care providers, many of whom have an interest in a growing private HIE market. Furthermore, changes spurred by the ACA have encouraged hospitals to start developing ACOs. These changes may challenge the viability of community-based HIOs and state-level services; thus, adequate state planning, the strategic offering of in-demand services, and stakeholder participation is critical to the program's longevity.

14. **HIETexas Continuing Query Exchange Services to Support Hurricane Relief**[7]
    http://www.thsa.org/august-2017/hietexas-continuing-query-exchange-services-to-support-hurricane-relief-efforts/
    As Texas moves forward in the coming weeks to deal with the immediate aftermath of Hurricane Harvey, there is a need to continue offering statewide query-based Health Information Exchange (HIE) services. We have all witnessed the power of information sharing during this incredibly challenging natural disaster. As a result, the Texas Health Services Authority (THSA) is announcing it will continue to offer query-based HIE services to assist in HIE coordination efforts.

    Emergency and disaster response is the utmost important use case for the need of HIE, and continuing this service as recovery operations continue will allow patients' health information to follow them regardless of where they receive care.

15. **Texas HIE Leaders Activate Capabilities to Support Healthcare Providers in the Wake of Harvey**
    https://www.healthcare-informatics.com/article/hie/healthcare-informatics-exclusive-harvey-devastates-houston-texas-hie-leaders-move-help

What should the CIOs, CMIOs, and other healthcare IT leaders in hospitals, medical groups, and health systems, be thinking about as they reflect on what's going on right now in Texas? "A few things," van Oordt said. "What I saw yesterday in the shelters was reflective of how an emergency can be handled. In one case, I was at a middle school, where 800 evacuees had gone. The technology available at that point and in that place was very minimal. They didn't have a fax or a PC, so one of the first things that comes to mind is that we need to make access to patient history fit that workflow. Something that comes to mind in that context is a phone-based app, because that's what most of the nurses already have and make use of. And the thinking is that you have essential information like allergies and medications and recent encounters, available through this phone app, and then later, you could deploy other features in such an app, as needed."

More broadly, van Oordt said, "This situation shows heart and soul where health information comes is critically needed. And this is the first major incident that's happened in the five years since Phil and I first worked together. My feeling is that patient information should be an available staple for emergency care. This is the ultimate use case for having patient information available. Patients are stressed out and providers are stressed out. This really is a staple of emergency care."

Meanwhile, Kelly Hoover Thompson, who was named SHIEC's CEO just over a week ago, told Healthcare Informatics, "This is the ultimate example of HIE's vital role and value to a community. It is how we support patient care, when a patient is facing some of their most critical and vulnerable life moments. This is why SHIEC exists, to take the greatest minds in HIE across the country, to make it work, and advance it, and educate people."

16. **Hurricane Sandy Proves the Value of Health IT Infrastructure, State Info Exchanges**
https://medcitynews.com/2012/10/hurricane-sandy-underscores-new-yorks-health-information-exchange-and-data-storage-logistics/
New York City hospitals' healthcare IT systems were severely tested in the grips of one of the worst storms to hit the city. Hurricane Sandy will serve as a reminder of the importance of having electronic medical records and access to a healthcare information exchange. For some hospitals, it will offer valuable lessons on data storage logistics and how their IT networks (and back-up generators) perform in a crisis.

Master Provider Directory

17. ***Inaccurate Provider Directories Create Barriers to Care***
http://managedhealthcareexecutive.modernmedicine.com/managed-healthcare-executive/news/inaccurate-provider-directories-create-barriers-care
Many health plans still rely on legacy systems where provider data is stored in multiple, disconnected databases. As business requirements have evolved, organizations have implemented incremental stop-gap measures to address data limitations, but these don't address the core challenge: the lack of a single source of truth.

Therefore, to create directories, provider data must be cross-referenced against multiple systems, which means it's more likely to contain redundancies and incomplete or incorrect data.

For example, health plans often update provider data annually as part of the contract and credentialing process, using this information to populate provider directories. For providers, documenting this information takes time as a detailed record can track up to 380 distinct line items, including service locations, billing locations, payment locations, specialties, certifications, affiliations, office hours, and languages spoken.

From a standards perspective, it's not unusual that the provider's information doesn't conform to the data structure required by the health plan. Take, for example, whether a provider is accepting new patients. Most health plans capture this data as a binary—yes or no—field, but the reality can be more nuanced. A provider specializing in a certain branch of medicine may be willing to accept patients that meet certain criteria, but not the general population. Or the specialist may be able to accommodate new patients at one service location, but not at another.

Payment Models

18. ***3 Strategies for Supporting Value-Based Care with Healthcare Analytics***
https://www.beckershospitalreview.com/healthcare-information-technology/3-strategies-for-supporting-value-based-care-with-healthcare-analytics.html
But we're still in the infancy of value-based care. The key to taking value-based care to the next level is data—specifically, leveraging the value of clinical and administrative data that exist in both payer and provider organizations. It demands payers, employers and providers to use the right tools—not only to integrate and analyze data, but also to share it in ways that are meaningful, providing physicians with actionable information to improve care.

19. ***Implementation of Value-Driven Outcomes Program Associated with Reduced Costs, Improved Quality***
https://www.eurekalert.org/pub_releases/2016-09/tjnj-iov090816.php
Vivian S. Lee, M.D., Ph.D., M.B.A., of the University of Utah, Salt Lake City, and colleagues measured quality and outcomes relative to cost from 2012 to 2016 at University of Utah Health Care. Clinical improvement projects included total hip and knee joint replacement, hospitalist (physicians who practice in the inpatient setting) laboratory utilization, and management of sepsis. Physicians were given access to a tool with information about outcomes, costs (not charges), and variation and partnered with process improvement experts.

20. ***Health IT Tools, Capabilities Required for Value-Based Care***[10]
https://ehrintelligence.com/news/health-it-tools-capabilities-required-for-value-based-care
A successful transition to value-based care will require effective partnerships between healthcare providers and health IT developers as well as among providers themselves to ensure that current and future EHR and health IT infrastructure lead to improved care delivery.

That was the message delivered by the keynote speaker at last week's Value-Based Care Summit in Chicago.

"Technology is a critically important driver of value-based care. If we don't have functional systems in place — technology that is connected, easy to use, provides a free flow of information across systems — then it will be impossible to effectively migrate to a value-based care model," said American Medical Association Board of Trustees Secretary Jesse M. Ehrenfeld, MD, MPH.

General

21. ***Managing Complexity with Health Care Information Technology***[9]
http://www.hhnmag.com/articles/6094-managing-complexity-with-health-care-information-technology
Information technology has transformative power. It can accelerate processes and make them less error-prone and more efficient. It can offer new services that overcome distance, time and the need for a physical structure, such as a storefront. It can deliver information instantly and in novel ways to decision-makers. And it can run algorithms to monitor equipment and correct minor problems before they become major problems.

COLORADO

Department of Public Safety

Jared Polis
Governor

Stan Hilkey
Executive Director

FY 2020-21 Request Year - IT Capital Request | September 2019

Signature Date 9/20/19

IT Capital Construction Priority: CC-IT-01
Title: Migration of CCIC to Cloud Infrastructure

Summary of Request	Total Funds	CCF-IT	Cash Funds	Reappropriated Funds	Federal Funds
FY 2020-21	$2,110,795	$0	$2,110,795	$0	$0
FY 2021-22	$0	$0	$0	$0	$0
FY 2022-23	$0	$0	$0	$0	$0

Select One: Categories of IT Capital Projects

System Replacement (costs escalating, failing technology, software or vendor support ended, or new technology, *e.g.*, DRIVES, CHATS)	**System Enhancement Regulatory Compliance** (new functionality, improved process or functionality, new demand from citizens, regulatory compliance, *e.g*, CBMS)	**Tangible Savings Process Improvement** (conscious effort to reduce or avoid costs, improve efficiency, *e.g.*, LEAN, back office automation)	**Citizen Demand "The Way Things Are"** (transformative nature of technology, meet the citizens where they are, *e.g.*, pay online, mobile access)

Request Summary:

This request is for $2,110,795 cash funds for FY 2020-21 from the Identification Unit Cash Fund (22Q0) for system migration of the Colorado Crime Information Center (CCIC) hardware and software to a private cloud environment. This project will transition the existing software and databases from the agency-procured hardware (which is 11-years old) to a hybrid environment using a private cloud solution for the production system, and the CDPS private cloud for the Disaster Recovery (DR) system.

- This request covers hardware procurement, data migration, software migration, testing, project management and telecommunications components related to the hardware replacement.
- This project will require a thorough testing of all the features and functions of the CCIC. Neither CBI nor Governor's Office of Information Technology (OIT) staff resources to perform this testing is included in this request.
- The CCIC stakeholder community includes every law enforcement and non-criminal justice agency in Colorado that performs criminal background checks for professional licensing, and thereby the citizens of the State of Colorado. Replacement of the hardware reduces the risk of system outages and the recovery time for system issues. These reductions in risk improve public safety as well as officer safety. They also prevent potential delays in professional licensing that could prevent Coloradoans from gainful employment. Any failure of the CCIC hardware would result in the immediate and complete suspension of secure electronic communications between law enforcement

agencies in Colorado and would isolate Colorado law enforcement agencies from the rest of the nation.

- The Colorado Bureau of Investigation (CBI) is reliant on staff members from the Department of Revenue's Division of Motor Vehicles, the Colorado State Judicial Department and the Colorado Integrated Criminal Justice Information System (CICJIS) to successfully complete the project.

Project Description:

This project will replace the underlying hardware for the CCIC state Criminal Justice Information Services (CJIS) system. The software is supported and regularly updated with acceptable usability and functionality. The project moves the production CCIC system to the Computer Projects of Illinois (CPI) private cloud. However, the disaster recovery system will remain hosted in the CDPS-OIT private cloud's virtualized environment.

CCIC is the conduit for law enforcement to access available information from state departments through integrated web services. CCIC communicates within the state with:

- Colorado Department of Revenue –Department of Motor Vehicles
- Colorado Department of Health and Environment – Medical Marijuana Registry System
- Colorado Department of Parks and Wildlife – Off-Highway Vehicle Registration System
- Colorado Department of Corrections
- Colorado State Judicial Department
- Colorado Department of Human Services – Department of Youth Services

Out of state, the system integrates with:

- FBI National Crime Information Center (NCIC)
- FBI Next-Generation Identification (NGI)
- International Public Safety and Justice Network (Nlets)
- Interpol
- Canadian Police Information Centre (CPIC)
- All 50 US states' CJIS Systems
- US territories of Puerto Rico, US Virgin Islands, and Guam

This system provides background checks for civil licensing of:

- Teachers
- Foster parents
- Adoptive parents
- Attorneys
- Child care providers
- At-risk adult care providers
- Real estate agents
- Medical professionals
- Liquor licensees
- Marijuana licensees
- Racetrack operators
- Gaming operators
- Federal employees
- Financial industry personnel
- Emergency medical technicians
- Explosive permits
- Housing program staff

Shown below is a sample network diagram of the CCIC and its many computer interfaces.

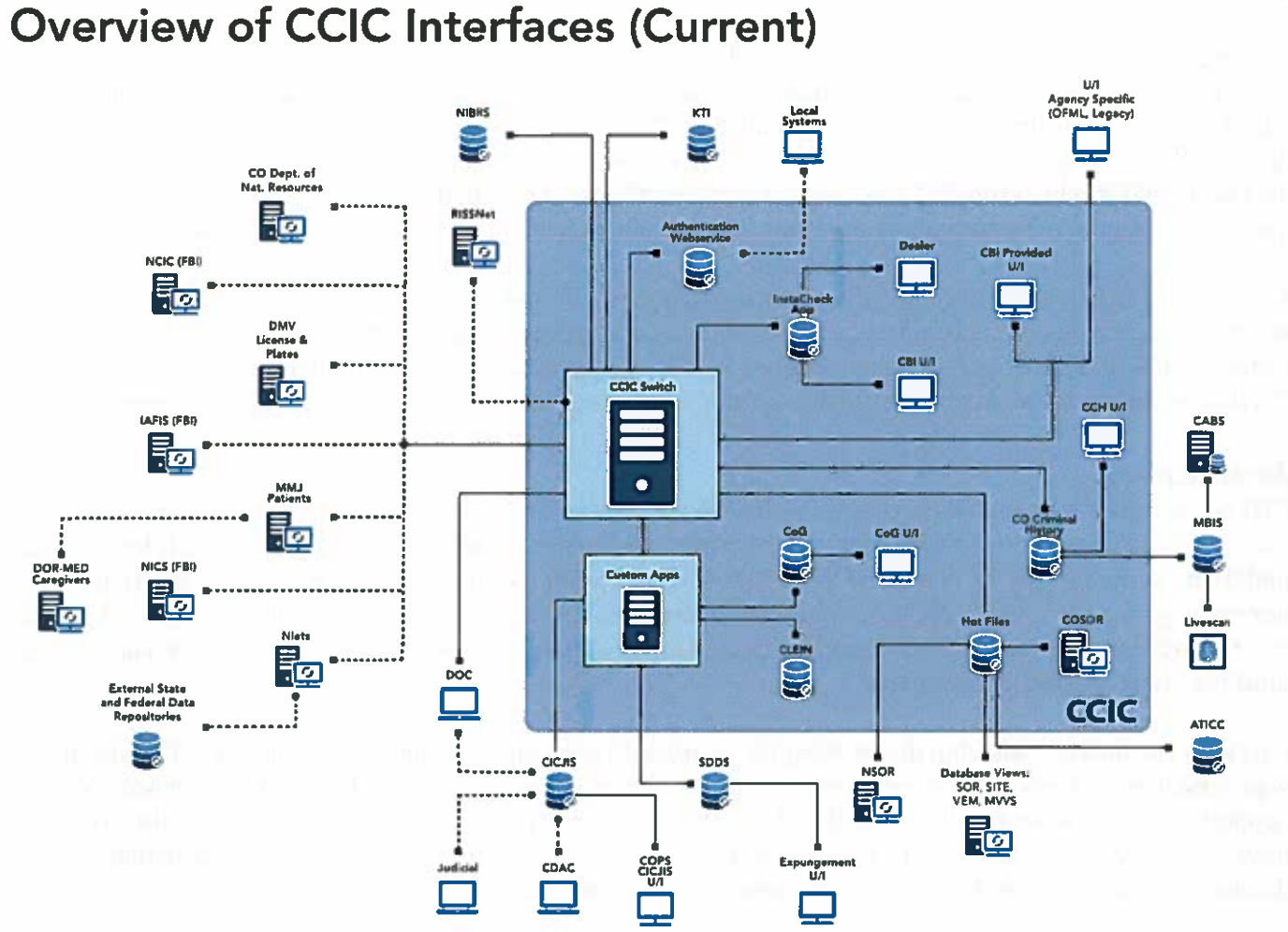

The Department has identified the following risks of not proceeding with this project:

1. Hardware failure – the longer the CCIC operates on the existing hardware, the greater risk of a catastrophic failure, leaving all of Colorado without access to the state's criminal justice information.
2. Reduced availability of replacement parts – Due to the age of the existing hardware, the CBI has found it more difficult to obtain additional hard drives, memory and other equipment needed to maintain CCIC.
3. Retraining – The number of CCIC users has increased by 100% in the past ten years. Neither CBI nor Governor's Office of Information Technology (OIT) have the staffing to retrain users on a new system.

Background of Problem or Opportunity:

The Colorado Crime Information Center underwent a full rebuild and modernization in 2010. At that time, hardware was purchased for a full production and disaster recovery system located at the CDPS data center at 690 Kipling Street and at E-Fort, respectively. Both systems have been in production since that time and operates on 24/7/365 basis. During the same time period, the user community for the systems has increased

by nearly 100% and minor hardware improvements, such as adding memory and storage, have been made in the past decade to accommodate this increase.

However, the fact remains that the system hardware is at the end of its useful life. The software running on the hardware is functional and will continue to operate on private cloud platform when migrated. In keeping with OIT's "Cloud-First" initiative, the production CCIC system will move to a private cloud and only the disaster recovery system will be state-hosted. This hybrid approach allows the state to keep a copy of the data on-hand for other potential uses, such as data warehousing and analytics. The project also benefits from the private cloud's offsetting hardware costs and focusing accountability for all system issues.

The CCIC system performs a half-billion transactions annually and maintains an operational status at 99.99%, delivering data between state and national repositories and criminal justice agencies or civil licensing entities. External state and local agency users comprise 26,000 unique accounts with growth of roughly 10% per year. Civil licensing users account for a smaller portion of the user community, or about 7,000 accounts.

Justification:

CBI performed a business requirements gathering and environmental scan for this project, which included a full system replacement as an alternative. Currently, the Federal Bureau of Investigation (FBI) has a project underway to modernize the National Crime Information Center (NCIC) which would impact any state project interfacing with the CCIC. NCIC's communication protocols and syntax are the foundation for CCIC, and it was determined it would not be prudent to consider a full system replacement of hardware and software until the NCIC project is completed.

CBI also considered replacing the existing hardware with new hardware and found that the difference in cost was immaterial. However, by replacing the hardware only, the CBI and OIT would experience increased support costs as the vendor that provides the CCIC software is moving to Linux databases while CBI would have remained on Oracle. OIT would then be required to staff for the support and maintenance of the databases with little cost difference on maintenance from the vendor.

The final alternative was to continue the status-quo with no hardware replacement. The IBM Blade Station hardware is no longer supported by IBM, which caused OIT to pay for third-party support. Moreover, there are no BIOS or firmware updates occurring for the hardware. This violates Federal Bureau of Investigation's Criminal Justice Information Security (FBI-CJIS) policy which requires routine patching of all systems supporting CJIS data. Additionally, as the existing hardware becomes obsolete, compatible hardware becomes harder to find, and only aging new-old-stock (NOS), non-licensed duplicate hardware, or used hardware will become unavailable. These options may extend the life of the CCIC, but it would introduce additional risks and instability into the system. This alternative also does not accommodate further growth, which as mentioned earlier has been growing by approximately 10% per year.

CCIC User Demand Chart:

Criminal justice agency users are the largest consumer of CCIC services and provide a reliable proxy to estimate system demand. The above chart indicates growth of the user community over the past decade; the most recent two years; and estimated over the next four years beginning FY 2018-19. Estimates are based on an average ten percent (10%) growth experienced over the chart period.

The recommended solution of migrating the system to a private cloud solution has the best cost-benefit analysis versus the alternatives. Although making no changes would be least costly in the short-term, the risk of hardware availability and risk of probable system failure are unacceptable for a system so vital to law enforcement and criminal justice agencies in Colorado. It is anticipated that by the end of the project, user demand could nearly triple the capacity when the system was initially planned in 2007. Costs are greater for the other solutions, with no incremental benefit for replacing all hardware and remaining on premises. For a full system replacement, CBI may find some benefit from new software, but the existing software is adequate and is still maintained. Therefore, although there may be potential benefit from a full system replacement, due to the existing NCIC project and the lack of major issues mean the cost would exceed the benefit.

Change Drivers:
This subsection presents an overview of the change drivers that compelled the Department to pursue an alternative to the current CCIC system.

Business Drivers:
As part of the discovery process, high-level business goals were identified that support the pursuit of the future CCIC processing model. These needs, or change drivers, related to the business rule side of this system operation are listed in the table below.

Ref.	Business Goal	Description
1	Cost-Effectiveness	Procure a more modular solution with current technologies that can be managed, updated, and replaced without requiring wholesale replacement of the entire system.
2	Risk Management	Manage the risks of implementing and operating the new CCIC environment while improving system and data integrity.
3	High Availability	Provide higher levels of service with the ability to meet new evolving requirements and user operational needs.
4	Disaster Recovery/ Business Continuity	Develop and manage a program that maintains a constant, verifiable state of Continuity of Operations (COOP) readiness with geographically separated production and disaster recovery systems.
5	Vendor Responsiveness	Streamline support model to facilitate timely and quality responsiveness with the CCIC solution provider(s).
6	Usability	Maintain user-friendliness of interface for trainers, administrators, and end users.

Technical Drivers:
The Department identified the following high-level technical needs, or change drivers, to support the pursuit of updated CCIC hardware with the existing software environment.

Ref.	Technical Goal	Description
1	Open Architecture	Retain open systems-based architecture that is more reliable, flexible, and maintainable. CCIC will need to be adjusted synchronously with the Federal Criminal Justice Information System (CJIS) N3G project to accommodate future enhancements.
2	Standards-Based System	Continue to adhere to national standards for data exchange, security, and interfaces.
3	Enhanced Security	Retain the necessary level of system security to protect users and information from unauthorized access.
4	Improved Support and Costs	Reduce points of accountability for support to ensure reporting is made to the appropriate party who can take action in critical situations. Additionally, reduce licensing costs by using Linux open-source software.
5	Scalable Capacity	Increase system capacity to accommodate a higher volume of transactions without additional procurement of equipment.

Criteria for success:
For this project, success is measured by having as few imperceptible user changes as possible. Specifically, it means:

- Deployment to new hardware with an outage time of less than 24 hours.
- No change to user interfaces, no training requirement.
- No change to law enforcement agency interface connections.
- No modifications required by user agency IT staff.
- Simplified support plan with vendor duties clearly defined.

- No OIT involvement in replacing defective production system hardware.
- Migration from Oracle to Linux databases with zero data loss.
- Reduced software and database licensing costs.

System Hardware Costs and Alternatives:
The Department worked with the vendor to determine the costs of the hardware replacement options. The below table shows the options explored and the annual 5-year cost of the transition.

Hardware Solution	Total Cost	Annual Cost
No Change — Continue using existing hardware*	$4,023,875	$804,775
On premise — CDPS purchases new hardware with shared OIT/Vendor support.	$5,312,177	$1,062,435
Vendor Private Cloud — Vendor purchases and hosts hardware with support provided by vendor.	$5,472,894	$1,094,578

*Replacement costs for failed equipment replacement not included in this estimate.

The cost table above does not include third-party project management or independent verification and validation (IV&V) services. Like the previous CCIC replacement, the Department anticipates use of a contracted project manager for the duration of the migration. Similar to the previous rebuild effort, the Department anticipates project management services for two years beginning FY 2020-21. Upon the conclusion of the migration to the private cloud, the Department will contract for Independent Verification and Validation services using an estimated five percent of total contract cost, or $54,170 cash funds. The total amount of professional services estimated for the migration effort is $182,691 cash funds.

If this request is not approved, and the State makes no changes, then the Department faces a much greater risk of system failure due to age of the hardware components. This would create a public safety risk because law enforcement personnel would have no access to driver's license, warrant, sex offender or criminal history information. It would also cause economic hardship by delaying the hiring processes in a number of industries which rely on professional licensing of employees. The use of aged hardware would also place the data stored within at risk of loss or degradation. Security vulnerabilities would grow, placing the personal information and criminal history information of Colorado citizens at risk of data loss. Replacing system hardware reduces these risks but leverages existing software to keep costs manageable.

Implementation Plan:

Change Management:

- Implementation will be a Department IT project and will be managed according to the standards of the Governor's Office of Information Technology's Project Management Office, and the Project Management Institute. Pursuant to state law, the CBI will contract an Independent Verification and Validation (IV&V) Project manager for appropriate oversight. Due to the potential impact to Department business operations, the CBI may also engage a contracted project manager to work in collaboration with an OIT project manager.
- Training on this project will include instructing individuals with database access to use the Linux database. The project assumes no end-user impact and therefore, no end-user training.

- Testing will involve full unit testing, system integration testing (SIT), performance testing, and data validation performed by the vendor and CBI staff. SIT may require engagement of managers and support staff for interconnected systems and therefore those individuals will be included in all communications planning.
- Stakeholder management will include engagement of the CBI-CJIS Advisory board members, managers of interconnected systems, as well as maintaining executive awareness of the project with law enforcement and non-criminal justice agency leadership. Advisory board members will advise on any changes that would be noticed or impactful on the law enforcement community. Although none are expected, they will be engaged for project awareness as a contingency. Managers of interconnected systems will be engaged to determine windows for testing and to ensure changes are well planned and understood. Because this project will slow or delay system changes to CCIC, therefore awareness for external stakeholder entity leaders must be built into the project.

Alignment with OIT Best Practices and Standards:
The OIT-CDPS five-year roadmap includes updating the hardware of the CCIC system. This project is a milestone goal in that roadmap. As stated previously, the CBI is aware that as a State IT project, the OIT Portfolio and Project Management Office practices and standards will be followed. All changes will comply with the OIT Cyber Security Policy, and the FBI-CJIS Security Policy.

Procurement:
Due to the retention of proprietary software and database structures by the CCIC vendor, or Computer Projects of Illinois (CPI), this project will be sole-source. OIT will provide procurement guidance on the contract with CPI. Furthermore, OIT will recommend and procure any needed hardware for the disaster recovery system placed at CDPS with advisement from the vendor and CBI.

Disaster Recovery and Business Continuity:
Both CBI and OIT-CDPS have Continuity of Operations (COOP) and Disaster Recovery (DR) plans which include CCIC. This project remains in alignment with the goals of those plans, and improves disaster recovery by increasing the geographic distance between the production and DR systems.

Accessibility Compliance:
Because this project does not change the end-user experience, accessibility compliance for the end user remains with the interface provided by the user agency.

Impact to IT Common Policy (For Statewide OIT Projects Only):
This hardware upgrade will retain all existing web services and exchange processes with other state agencies. Successful testing and verification of the project milestones will be measured by the continuity of existing processes and exchanges without change.

ADDITIONAL REQUEST INFORMATION		
Please indicate if three-year roll forward spending authority is required.	X☐ Yes	☐ No
Is this a continuation of a project appropriated in a prior year?	☐ Yes	X☐ No
If this is a continuation project, what is the State Controller Project Number?		
Please attach letter from OIT indicating review and approval of this project		

ESTIMATED PROJECT TIME TABLE		
Steps to be completed	**Start Date**	**Completion Date**
Draft Request for Proposal (RFP) for Project Management Services	Apr 2020	Jun 2020
Post Request for Proposal	Jul 2020	Jul 2020
Convene RFP Selection Committee	Aug 2020	Aug 2020
Post RFP Award for Project Management Services	Sep 2020	Sep 2020
Cloud Migration Kickoff Meeting	Oct 2020	Oct 2020
Complete Cloud Migration Project	Jun 2021	Jun 2021
Draft RFP for IV&V Services	Jul 2021	Jul 2021
Post RFP for IV&V Services	Aug 2021	Aug 2021
Convene RFP Selection Committee	Sep 2021	Sep 2021
Post RFP Award for IV&V Services	Oct 2021	Oct 2021
Complete IV&V Project	Nov 2021	Jun 2022

CASH FUND PROJECTIONS (DELETE IF NOT APPLICABLE)			
Cash Fund name and number:	**Colorado Bureau of Investigation Identification Unit Fund (22Q0)**		
Statutory reference to Cash Fund:	**24-33.5-426 C.R.S.**		
Describe how revenue accrues to the fund:	**Revenue is collected for the purposes of fingerprint criminal history record checks and name criminal history record checks.**		
Describe any changes in revenue collections that will be necessary to fund this project:	**No revenue changes are expected.**		
FY 2018-19 Actual Ending Fund Balance	**FY 2019-20 Projected Ending Fund Balance**	**FY 2019-20 Projected Ending Fund Balance with Project Approval**	**FY 2020-21 Projected Ending Fund Balance with Project Approval**
$5,552,662	**$6,252,662**	**$6,070,232**	**$6,131,727**

RY_CC-IT: CAPITAL CONSTRUCTION INFORMATION TECHNOLOGY REQUEST FOR FY 2020-21

Department	Public Safety	Signature Department Approval:	Date 9/10/19
Project Title	Migrate CCIC to Private Cloud	Signature OIT Approval:	Date 09/26/2019
Project Year(s)	FY21 - FY22	Signature OSPB Approval:	Date 10/1/2019
Department Priority Number			
Five-Year Roadmap?	Yes	Name and e-mail address of preparer:	Neilsun Valenski, neilsun.valenski@state.co.us

Revision? Yes No
If yes, last submission date: _____

		Total Project Costs	Total Prior Year Appropriations	Current Request FY 2020-21	Year 2 Request	Year 3 Request	Year 4 Request	Year 5 Request
(1)	Consultants/Contactors	$ 123,700		$ 123,700	$ -	$ -	$ -	$ -
(2)	Quality Assurance	$ -	$ -		$ -	$ -	$ -	$ -
(3)	Independent Verification and Validation (IV&V)	$ 54,170	$ -	$ 54,170	$ -	$ -	$ -	$ -
(4)	Training	$ -	$ -	$ -	$ -	$ -	$ -	$ -
(5)	Leased Space (Temporary)	$ -	$ -	$ -	$ -	$ -	$ -	$ -
(6)	Feasibility Study	$ -	$ -	$ -	$ -	$ -	$ -	$ -
(7a)	Inflation for Professional Services	$ -	$ -	$ -	$ -	$ -	$ -	$ -
(7b)	Inflation Percentage Applied		0.00%	3.00%	3.00%	0.00%	0.00%	0.00%
(8)	Other Services/Costs	$ -	$ -	$ -	$ -	$ -	$ -	$ -
(9)	*Total Professional Services*	$ 182,691	$ -	$ 182,691	$ -	$ -	$ -	$ -
(1)	Software COTS	$ 140,000	$ -	$ 140,000	$ -	$ -	$ -	$ -
(2)	Software Built	$ -	$ -	$ -	$ -	$ -	$ -	$ -
(3a)	Inflation on Software	$ -	$ -	$ -	$ -	$ -	$ -	$ -
(3b)	Inflation Percentage Applied		0.00%	3.00%	0.00%	0.00%	0.00%	0.00%
(4)	*Total Software*	$ 144,200	$ -	$ 144,200	$ -	$ -	$ -	$ -
(1)	Servers	$ 647,390	$ -	$ 647,390	$ -	$ -	$ -	$ -
(2)	PCs, Laptops, Terminals, PDAs	$ 600,000	$ -	$ 600,000	$ -	$ -	$ -	$ -
(3)	Printers, Scanners, Peripherals	$ -	$ -	$ -	$ -	$ -	$ -	$ -
(4)	Network Equipment/Cabling	$ 186,000	$ -	$ 186,000	$ -	$ -	$ -	$ -
(5)	Other (replace legacy firewalls)	$ 250,000	$ -	$ 250,000	$ -	$ -	$ -	$ -
(6)	*Miscellaneous*	$ -	$ -	$ -	$ -	$ -	$ -	$ -
(7)	*Total Equipment and Miscellaneous Costs*	$ 1,683,390	$ -	$ 1,683,390	$ -	$ -	$ -	$ -
(1)	5% project contingency	$ 100,514	$ -	$ 100,514	$ -	$ -	$ -	$ -
	Total Budget Request (A+B+C+D)	$ 2,110,795	$ -	$ 2,110,795	$ -	$ -	$ -	$ -
	GF	$ -	$ -	$ -	$ -	$ -	$ -	$ -
	CF	$ 2,110,795	$ -	$ 2,110,795	$ -	$ -	$ -	$ -
	RF	$ -	$ -	$ -	$ -	$ -	$ -	$ -
	FF	$ -	$ -	$ -	$ -	$ -	$ -	$ -
	check grand total	$2,110,795	$0	$2,110,795	$0	$0	$0	$0

COLORADO
Department of Corrections
Office of the Executive Director

Dean Williams | Executive Director
1250 Academy Park Loop
Colorado Springs, CO 80910
P 719.226.4701 | F 719.226.4728
DOC_ExecutiveDirector@state.co.us

October 1, 2019

Dear Honorable Senator Todd,

The Department of Corrections (DOC), along with the Governor's Office of Information Technology (OIT), is requesting a time extension of its information technology (IT) capital construction fund spending authority for the DeCORuM project to implement a fully-integrated electronic offender management information system (eOMIS) with integrated electronic health records (EHR), within its 20 state correctional facilities, the Division of Parole, Parole Board, private prison partners, community corrections, and DOC headquarters. DOC/OIT will not be able to complete all phases of this project before the funds appropriated for the FY 2017-18 Phase III request expire in June 2020. This request seeks an additional three years (until June 2023) to spend funds already appropriated for the DeCORuM project in order to field a fully developed system.

The DOC, in cooperation with OIT, requested funding to migrate its current information technology system from a 27-year old mainframe legacy computer system to a modernized computer platform. The Department received IT capital construction funding in the amount of $30,300,901 for this project (July 1, 2014 - June 30, 2020). The funding was requested over three phases with the most recent request submitted on October 1, 2016 for FY 2017-18 funding. The Phase III funding request was based upon the original contract signed in July 2015, including the vendor payment schedule detailed in the contract, and OIT staffing expenses.

The implementation of the project has been delayed due to data migration, system delays, and system issues. The first phase of the DeCORuM project focused on developing and implementing electronic health records. The Department encountered issues with the initial pharmacy solution and determined in May 2016 that this solution was not feasible. After an unsuccessful attempt to integrate the legacy pharmacy system into the newly developed EHR system, the Department determined it would seek a vendor-supplied pharmacy solution, which delayed the project by 18 months. In November 2016, the Department received the results from a Behavioral Health audit requested by the Legislative Audit Committee and performed by State Auditors. To implement the audit recommendations, DOC had to modify the eOMIS business rules to capture and report additional data that was not in the legacy system. The new data requirements, driven by audit findings, required the vendor to shift development resources to this effort and delayed the project an additional 12 months. Taken together, project changes and delays have moved the DeCORuM project's target completion date for the final phases, resulting in the request for an extension to spend the funds appropriated for the project.

DeCORuM's functionality, currently in production, includes the EHR system and the required Behavioral Health system changes and audit reports. The pharmacy system has completed functional testing and is entering the user acceptance testing phase.

The requested time extension will utilize the remaining capital construction funding appropriated in FY 2017-18. DOC and OIT are requesting a three-year time extension through June 2023 with a cost neutral impact.

Total IT Capital Construction Funding	$30,300,901
Estimated Expenditures by June 30, 2020	$22,800,901
Estimated Amount of Funding to be extended	$ 7,500,000

In order for the project to remain cost neutral, OIT will retain a portion of the system maintenance funding appropriated for this system in FY 2019-20 and use it to pay for OIT staff working on the project in future years. The IT capital construction funding paid for the first 5 years of vendor maintenance for the DeCORuM system (FY 2014-15 through FY 2018-19). The Department's FY 2019-20 operating request for the vendor maintenance payments was approved and appropriated in the FY 2019-20 Long Bill. Due to the project delays, a portion of those funds will not be needed for maintenance in FY 2019-20. The DOC's Payments to OIT line will be expensed for these funds; however, they won't be used by OIT to pay for DeCORuM system maintenance in FY 2019-20. As allowed in C.R.S. 24-37.5-112(2), the unused funds will revert to the Technology Advancement and Emergency Fund at the end of FY 2019-20 and be made available for OIT staff working on the DeCORuM project. These costs are estimated at approximately $1.3 million in FY 2020-21 and $850,000 in FY 2021-22.

DOC and OIT remain committed to working together with our independent IV&V partner to closely monitor the DeCORuM project and ensure the vendor delivers the integrated offender management system and EHR funded by this project. Pursuant to Joint Technology Committee approval, DOC expects to complete this project within budget by June 30, 2023.

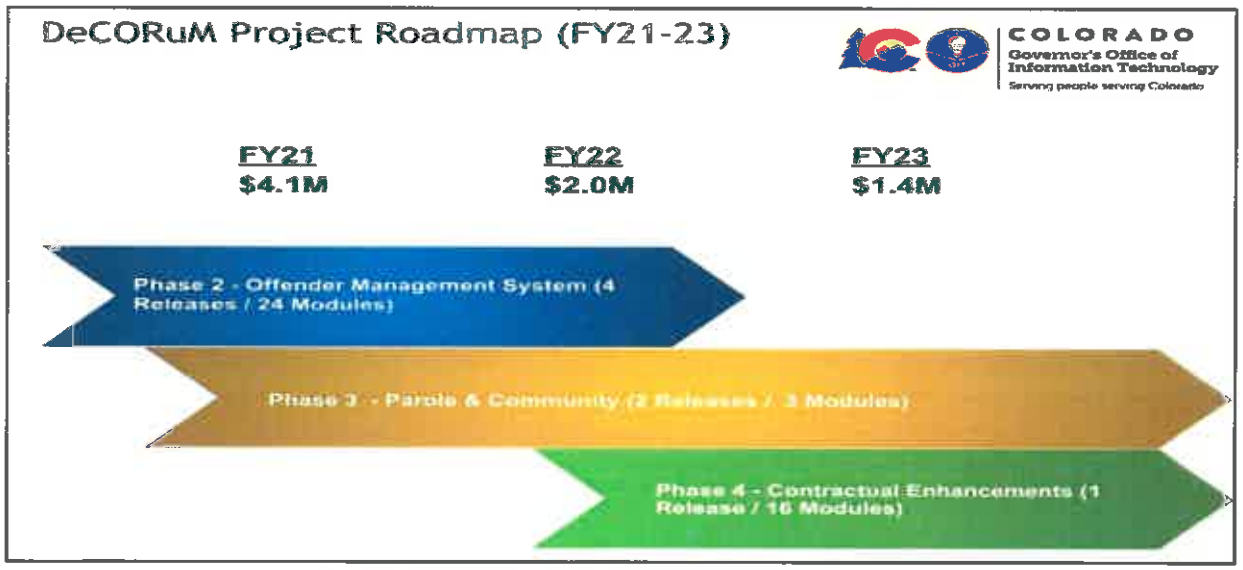

Department staff are utilizing measurements of system verification and testing (SVAT), an Agile development methodology, and stakeholder feedback in order to maintain a high quality of

vendor deliverables and ensure maximum efficiency of OIT resources. Further indications of success will be the ability to have a new, modernized system as well as elimination of manual work-arounds, multiple standalone systems, and system legacy dependency.

Funding Timeline

IT Capital Construction Current Funding:

FY 2014-15 Phase I request	$ 5,796,000
FY 2015-16 Phase II request	$11,049,761
FY 2016-17 Supplemental request	$ 845,057
FY 2017-18 Phase III request	$12,610,083
Total to date:	$30,300,901

Current 10-year Contract with Marquis (total) $26,566,604*

*included $8,842,988 maintenance funding

Operating Funding through Payments to OIT

FY 2018-19 V-Block License		$ 90,723
FY 2019-20 Total		$2,796,520
Maintenance	$2,191,487*	
Oracle & EMC License	$ 523,583	
Blade Servers	$ 4,800	
Resource Code	$ 76,650	

*Maintenance decreases in FY 2020-21 to $1,327,091

DOC and OIT value our partnership with the Joint Technology Committee and are available to provide additional information as needed. The Departments are working on an OIT contract restatement with the vendor which will provide a roadmap of the new deployment schedule.

If you have any questions, please contact Deb Goheen, Director of Finance and Administration (719-226-4705) or Richard Stewart, Director of Information Technology (719-226-4100).

Sincerely,

Dean Williams
DOC Executive Director

Theresa Szczurek
Chief Information Officer & Executive Director

Cc: Representative Jonathan Singer, Vice-Chair, Joint Technology Committee
Representative Mark Baisley
Senator Jack Tate
Senator Jeff Bridges
Representative Brianna Titone
Luisa Altman, Joint Technology Committee Staff
Andrea Denka, Joint Technology Committee Staff
Jean Billingsley, Joint Technology Committee Staff
Lauren Larson, Director, Office of State Planning and Budgeting
Ben Henderson, Office of State Planning and Budgeting

RY_CC-IT: CAPITAL CONSTRUCTION INFORMATION TECHNOLOGY REQUEST FOR FY 2020-21

Department	Department of Corrections	Signature Department Approval:	Date
Project Title	DeCORuM	Signature OIT Approval:	Theresa Szymanek Date 9/27/19
Project Year(s):	FY 2021-23	Signature OSPB Approval:	Date 10/1/2019
Department Priority Number	1		
Five-Year Roadmap?	Yes	Name and e-mail address of preparer:	Kristy Meyer-Vyncke kristy.meyer-vyncke@state.co.us

Revision? Yes No If yes, last submission date: _____		Total Project Costs	Total Prior Year Appropriations	Current Request FY 2020-21	Year 2 Request	Year 3 Request	Year 4 Request	Year 5 Request
A.	*Contract Professional Services*							
(1)	Consultants/Contactors	$ 6,548,535	$ 6,548,535	$ -	$ -	$ -	$ -	$ -
(2)	Quality Assurance	$ -	$ -		$ -	$ -	$ -	$ -
(3)	Independent Verification and Validation (IV&V)	$ 1,174,978	$ 1,174,978	$ -	$ -	$ -	$ -	$ -
(4)	Training	$ 135,000	$ 135,000	$ -	$ -	$ -	$ -	$ -
(5)	Leased Space (Temporary)	$ 760,709	$ 760,709	$ -	$ -	$ -	$ -	$ -
(6)	Feasibility Study	$ -	$ -	$ -	$ -	$ -	$ -	$ -
(7a)	Inflation for Professional Services	$ -	$ -	$ -	$ -	$ -	$ -	$ -
(7b)	Inflation Percentage Applied		0.00%	0.00%	0.00%	0.00%	0.00%	0.00%
(8)	Other Services/Costs	$ -	$ -	$ -	$ -	$ -	$ -	$ -
(9)	*Total Professional Services*	$ 8,619,222	$ 8,619,222	$ -	$ -	$ -	$ -	$ -
B.	*Software Acquisition*							
(1)	Software COTS	$ 14,939,942	$ 14,939,942	$ -	$ -	$ -	$ -	$ -
(2)	Software Built	$ -	$ -	$ -	$ -	$ -	$ -	$ -
(3a)	Inflation on Software	$ -	$ -	$ -	$ -	$ -	$ -	$ -
(3b)	Inflation Percentage Applied		0.00%	0.00%	0.00%	0.00%	0.00%	0.00%
(4)	*Total Software*	$ 14,939,942	$ 14,939,942	$ -	$ -	$ -	$ -	$ -
C.	*Equipment*							
(1)	Servers	$ 1,393,440	$ 1,393,440	$ -	$ -	$ -	$ -	$ -
(2)	PCs, Laptops, Terminals, PDAs	$ 18,608	$ 18,608	$ -	$ -	$ -	$ -	$ -
(3)	Printers, Scanners, Peripherals	$ -	$ -	$ -	$ -	$ -	$ -	$ -
(4)	Network Equipment/Cabling	$ 1,122,952	$ 1,122,952	$ -	$ -	$ -	$ -	$ -
(5)	Other (Specify)	$ 2,344,077	$ 2,344,077	$ -	$ -	$ -	$ -	$ -
(6)	*Miscellaneous*	$ 460,000	$ 460,000	$ -	$ -	$ -	$ -	$ -
(7)	*Total Equipment and Miscellaneous Costs*	$ 5,339,077	$ 5,339,077	$ -	$ -	$ -	$ -	$ -
D.	*Project Contingency*							
(1)	5% project contingency	$ 1,402,660	$ 1,402,660	$ -	$ -	$ -	$ -	$ -
E.	*Total Request*							
	Total Budget Request [A+B+C+D]	$ 30,300,901	$ 30,300,901	$ -	$ -	$ -	$ -	$ -
F.	*Source of Funds*							
	GF	$ 30,300,901	$ 30,300,901	$ -	$ -	$ -	$ -	$ -
	CF	$ -	$ -	$ -	$ -	$ -	$ -	$ -
	RF	$ -	$ -	$ -	$ -	$ -	$ -	$ -
	FF	$ -	$ -	$ -	$ -	$ -	$ -	$ -
	check (should = E)	$30,300,901	$30,300,901	$0	$0	$0	$0	$0

COLORADO

Department of Natural Resources

Jared Polis
Governor

Dan Gibbs
Executive Director

FY 2020-21 Request Year-IT Capital Request | *October 1, 2019*

Signature 9/13/19 Date

RY – Department IT Capital Construction Priority:
Colorado Parks and Wildlife Website Redesign and Platform Migration

Summary of Request	Total Funds	CCF-IT	Cash Funds	Reappropriated Funds	Federal Funds
FY 2020-21	$924,000	$0	$924,000	$0	$0
FY 2021-22	$0	$0	$0	$0	$0
FY 2022-23	$0	$0	$0	$0	$0

Select One: Categories of IT Capital Projects (most are driven by one category with components of all)

System Replacement (costs escalating, failing technology, software or vendor support ended, or new technology, *e.g.*, DRIVES, CHATS)	**System Enhancement Regulatory Compliance** (new functionality, improved process or functionality, new demand from citizens, regulatory compliance, *e.g*, CBMS)	**Tangible Savings Process Improvement** (conscious effort to reduce or avoid costs, improve efficiency, *e.g.*, LEAN, back office automation)	**Citizen Demand "The Ways Things Are"** (transformative nature of technology, meet the citizens where they are, *e.g.*, pay online, mobile access)

Request Summary:

Colorado Parks and Wildlife (CPW) requests $924,000 in cash spending authority to fund a website redesign and platform migration. This cost includes a 5.0 percent project contingency. The new site will be vendor hosted and vendor supported, and CPW estimates annual maintenance and support costs will require $150,000 in annual cash spending authority beginning in fiscal year 2021-22. (CPW will have much more precise annual operating cost estimates by November 2019 following a planned Request for Information (RFI) process.) Funding for this project will be split between the Parks and Outdoor Recreation Cash Fund (40 percent) and the Wildlife Cash Fund (60 percent) at levels that are consistent with the agency's current Payments to OIT common policy costs. CPW considers this a system replacement project that is necessary because of failing technology and the opportunities offered by new technology.

The CPW website provides services and information to CPW staff, both Coloradans and visitors to the state, and the wildlife and recreation management research community and educators. The CPW website received 17.7 million page views in 2018 and is the single largest and most important communication tool available to the agency. CPW considers the audience for its website to consist of five groups of "meta-users":

- Recreationists
- Scientists/researchers educators
- Job seekers
- Watchdogs/change makers
- Business owners/auxiliary interests

Project Description:

The current CPW website was built and designed when the Colorado Parks and Outdoor Recreation Division and the Division of Wildlife merged in 2011-2012. The resulting website consolidated content from the two predecessor agency websites into one. This proposed FY 2020-21 project consists of a full redesign and redevelopment of the existing site to meet current industry standards. The project will also replace the current site's hosting platform, SharePoint, with a vendor-hosted responsive platform.

A website redesign and platform migration will use the most modern technology, be fully functional on all platforms (phone, tablet, desktop), and will offer useful interactive content. The new site will be compliant with Title III of the Americans with Disabilities Act (ADA), which prohibits discrimination on the basis of disability in "places of public accommodation." Recent legal interpretations of Title III have included the websites of public entities within the definition of places of public accommodation. What constitutes an ADA-compliant website is not yet a matter of settled law, but a general interpretation is that web content should be accessible to the blind, deaf, people who suffer from photosensitivity, and people who must navigate by voice, with screen readers, or with other assistive technologies. The Web Content Accessibility Guidelines (WCAG), published by the World Wide Web Consortium Web Accessibility Initiative (WAI), have emerged as a commonly referenced standard set of technical standards to help determine a website's compliance with the ADA. With its redesign project, CPW will strive to achieve compliance with WCAG 2.0 Level AA standards.

An improved, modern site will also streamline author-contributed content through standardized editing, templates, improved page navigation, and improved applications specific to external content.

CPW has recently completed a website scoping project to help determine:

- The functionality of the current website
- The amount of content that would need to be migrated to a new site,
- The changes required to update this content to be responsive in design, to adapt to the device a person is using
- The modifications of site content to become ADA compliant
- A plan to allow for continually growth using a more responsive platform that reduces the need for major platform overhauls.

CPW plans to initiate a Request for Information (RFI) process in the near future. This process will provide a much clearer view of the final deliverable and the development process. At this time, based on the scoping project, CPW and OIT staff envision the project as including the following steps:

- Design
  - Visual design, adhering to but extending established styles
  - User interface design, possibly including a style guide and/or component library
  - Information architecture
  - Additional activities to define a customer-focused experience across the site
- Selection, implementation (including all front- and back-end development), and deployment of a content management system (CMS)-based site
- Development support for the forms and applications used by the site, including migrating, updating and if necessary, rewriting applications
- Research and user testing
- Content strategy, including development of a governance model and guidelines for using structured content throughout the site, and plan for buy-in and long-term adherence
  - Translation services (Spanish)
  - Copywriting
- Hosting by a recommended third-party provider
- Post-launch support, including:
  - Regular maintenance and updates, supporting updates to the platform, security updates, and urgent fixes and repairs
  - A plan for maintaining the performance and quality of the site
  - A budget and process for ad hoc enhancements and updates to the site

This project will require close coordination with OIT staff and will include the creation of a CPW Website Development board. This group will hold regular meetings and will conduct outreach to stakeholder groups to review the ideas, content and workflow of the project. This group will also engage internal and external stakeholders to make sure the functionality of the website is intact prior to the official public launch.

Risks and Constraints: As with any major project or infrastructure upgrade the risks associated with this project include system glitches and the potential for missed content or lost functionality in the migration of the system. To help avoid these issues, CPW will work closely with OIT from the beginning to understand the security needs, system integration needs, and data protection requirements. OIT has been involved in the ongoing conversations about this project and has committed to make available a Business Analysist to assist with each phase of the redesign and implementation once the project has been formally initiated.

Operating Budget Impact: The estimated cost of this project will be $600,000 - $900,000 in cash spending authority to fund a website redesign and platform migration. With the new site, CPW will move to a vendor-hosted, vendor-supported operating model. Ongoing maintenance and support costs are estimated to require $150,000 in annual cash spending authority. This annual maintenance budget will support licensing, security upgrades, annual application support, updates and bug fixes, and additional site or application build outs as needed.

Background of Problem or Opportunity:

The current CPW site (at https://cpw.state.co.us/) has been in use since launch in 2012. After the merger of the Division of Wildlife and Division of Parks and Outdoor Recreation in 2011, a new site had to be created

quickly to support the newly merged agency. The needs of the agency, and the needs of the public, have changed significantly since 2012, as have the technological capabilities on the broader market. The use of a variety of devices continues to evolve and the current web hosting platform that the CPW website is on does not allow for responsive integrated design. This means the current site cannot automatically adjust frame size and pixilation; CPW staff is required to custom code each page to try and meet these needs. As a result, some website functionality is currently lost by certain users, such as those connecting to the CPW website using smartphones and iPads.

The current site's template and page functionality is locked into cumbersome designs based on the SharePoint platform parameters. This essential functionality is labor intensive to manage and requires manual development by OIT staff. By hosting the CPW website on a vendor-hosted platform it will also allow OIT staff members to reduce a backlog of needed maintenance, as well as program and application fixes, and focus on critical technological support for the CPW including the integrated purchasing system and other areas of the agency. By freeing up this support through a vendor-hosted system, it will allow network and development teams to be more agile to meet agency needs.

Justification:

There are a number of strong justifications for CPW to undertake a website redesign at this time.

Replace obsolete technology: The website's SharePoint hosting platform is being phased out by Microsoft; the securities and functionality of the platform will no longer be supported in the near future. CPW is initiating this project in an effort to avoid security risks to CPW, DNR, and the State of Colorado. Further, SharePoint is dated and does not support the needs of the agency or CPW's e-commerce business. The SharePoint platform does not meet industry standards with regard to responsive and integrated design. It also does not meet federal guidelines for ADA compliance.

Improve interface and content: The existing site's content suffers from poor organization, inadequate navigation, and unacceptably low accessibility. There is no governance plan to guide the many contributors who can add and edit content, and current authors sometimes report they have trouble finding and managing all of the content relevant to their teams. The site's interface is dated, unintuitive, and limited in the types of content that it can offer. CPW is restricted to using web functionality that was available more than six years ago. Search engines like Google continually update their algorithms to increase the efficacy of their search results. CPW's dated platform makes key word scanning difficult resulting in lost placement and ranking in searches.

Improve functionality for mobile devices: The merged website was not designed for tablets or smart phones. In 2017, more than 48 percent of traffic to the CPW site was from mobile devices. CPW expects this percentage to increase in the future. The site is difficult to navigate on mobile devices. CPW staff must manually reformat individual web pages so that they display correctly and at the appropriate size on mobile devices. The out-of-date technology behind CPW's website limits the agency's ability to integrate advanced features into the site, including better interactive maps and other content.

ADA compliance: The current platform and CPW site does not meet federal guidelines for ADA compliance. The Department of Justice (DOJ) published the Americans with Disabilities Act (ADA) Standards for Accessible Design in September 2010. These standards state that all electronic and information technology must be accessible to people with disabilities. The ADA encourages self-regulation of accessibility standards as the DOJ develops regulations to provide specific guidance to the entities covered by the ADA. Organizations are encouraged to use the WCAG 2.0 level AA guidelines as a guide on how to become

accessible, which is one of the redesign requirements for vendor who is awarded the contract for the CPW website.

Cost-Benefit Analysis and Project Alternatives (per H.B. 15-1266): CPW plans to conduct a formal cost-benefit analysis as part of the RFI process, and will include this information with the November 1 legislative budget submission. This analysis will have to take into account several factors:

- Updating the system and functionality of the CPW website will provide better flexibility for CPW to meet the growing technology industry, the needs of our customers and grow with business requirements. CPW is an enterprise agency: instead of receiving General Fund or other state revenues from the General Assembly, CPW is responsible for generating its own revenue, for example through the sale of licenses. The current experience of completing a transaction is poor and impacts sales; an improved, more seamless experience that brings in more funds is a critical priority.
- The size and scope of the CPW website, the functionality, and public that the agency serves requires a highly technical and customized platform and design principal. The level of technical functionality requires a vendor to be agile and have a breadth of expertise to support the nature of business CPW conducts.
- CPW has 362 customized applications, widgets, displays or searches currently available on its website. These will need to be reviewed, analyzed and rebuilt by a vendor.

Success Criteria and Improved Performance Outcomes: Currently the CPW web team uses a specific vendor (SiteImprove) to analyze web performance and functionality. CPW would like to increase several key performance indicators (KPIs) and established metrics with the redesign and platform migration. The following quality scores for CPW's site were recently recorded by SiteImprove:

- Content Freshness: 79.6
- User Experience: 87.6
- Accessibility: 61.8
- Search engine optimization: 76.3

CPW will strive to improve each of these metrics with the redesigned website.

Assumptions for Calculations: CPW's estimated cost of $924,000 is based on a three-phase development process, encompassing approximately six months. This cost and timeline are estimates at this time; CPW will have more precise costs and a more accurate timeline following the RFI process.

At the highest level, the three phases will consist of the following:

<u>Phase 1, estimated cost $180,000</u>: Stakeholder and user-needs research; content evaluation, strategy, and planning; branding review; technical discovery and content management system selection; workshops; findings summaries and reporting.

<u>Phase 2, estimated cost $320,000</u>: Design; workshops, concept creation and revision; content creation; prototype development; prototype usability test validation with end users (including persons with disabilities); design and prototype refinement.

Phase 3, estimated cost $380,000: Content management system configuration and deployment; site development, updates and adaptations to tools and other features; launch.
5% project contingency, estimated cost $44,000

Please see Attachment A for a more detailed breakdown of the cost elements of each phase. Cost estimates are based on a blended rate of $200 per hour for professional staff.

Content management system costs are based on the use of an open source platform. Should the project lend itself to a commercial platform, these costs could increase significantly.

Impacts to CPW staff workload, including the costs associated with the Website Development Board, will be absorbed within existing resources.

Copywriting will be primarily managed by a Content Strategist and is included in these cost estimates. Additional copywriting will be performed by CPW staff or possible additional contractors.

Consequences if not Funded: Long-term, the secure functionality of the CPW website will no longer be supported by Microsoft. The official date of this termination of support is unclear, but this project proposal is being brought forward in an effort to avoid potential functional issues and security vulnerability. The backend of the system will remain cumbersome and will require significant and increasing OIT support. Due to the technological advancement of the industry, CPW and OIT will need to continue patching fixes and reconfiguring customized applications.

Implementation Plan:

This project will undergo an RFI process to help strengthen the proposal, followed by a much more detailed RFP process. With approved funding, CPW will convene a Website Development Board and begin work with the selected vendor to outline the specific project plan and implementation dates. CPW anticipates that the new website will be launched to the public in 2021.

Change Management: CPW will require vendors to provide detailed change management plans as part of the RFP process. Based on the scoping project and preliminary work with OIT staff, CPW believes a change management plan will include the following elements:

Training: Training will include in person training, webinars, content creation and template creation training, and vendor hosted online support. Training may also include:

- Internal staff training prior to launch of the new CPW website
- Technical training for staff supporting the system.

Testing: Prior-to-launch testing will include:

- User-acceptance testing
- System integration testing
- Performance testing

- Data migration testing.

User experience testing will be a part of the designing process. Focus groups will be used to help determine the customer and public's need for functionality and content readability. A soft launch will be provided to key stakeholders (internal and external) to make sure system functionality is reliable and content migration has successfully occurred.

Alignment with OIT Best Practices and Standards: This project proposal meets all of the necessary cyber security requirements set forth by OIT and the federal government. The project will incorporate ADA integration to become compliant with the DOJ requirements.

Procurement: CPW has worked with OIT personnel from the beginning of this idea generation to the procurement of a vendor to assist in the scoping project.

Disaster Recovery and Business Continuity: This project will be built while the current website is operational. The CPW website will not be replaced until the new website is operational and ready to sustain business operations. If at any point the project does not meet agreed upon deliverables, CPW will work with the OIT Business Analyst to determine the appropriate course of action.

Accessibility Compliance: As part of the project plan and RFI/RFP process CPW will require the vendor to adhere to ADA compliance to make sure that the content provided meets the Americans with Disabilities Act (ADA) standards for accessible design created and published in September 2010. These standards state that all electronic and information technology must be accessible to people with disabilities. The ADA encourages self-regulation of accessibility standards as the DOJ develops regulations to provide specific guidance to the entities covered by the ADA. CPW will use the WCAG 2.0 level AA guidelines as a guide on how to become accessible.

Impact to IT Common Policy (For Statewide OIT Projects Only): NA

ADDITIONAL REQUEST INFORMATION		
Please indicate if three-year roll forward spending authority is required.	✓ Yes	❑ No
Is this a continuation of a project appropriated in a prior year?	❑ Yes	✓ No
If this is a continuation project, what is the State Controller Project Number?		
Please attach letter from OIT indicating review and approval of this project		

ESTIMATED PROJECT TIME TABLE		
Steps to be completed	**Start Date**	**Completion Date**
TBD based on the outcome of the planned RFP process		

CASH FUND PROJECTIONS	
Cash Fund name and number:	**Wildlife Cash Fund**
Statutory reference to Cash Fund:	**C.R.S. 33-1-112(1)(a)**
Describe how revenue accrues to the fund:	Revenues in the Wildlife Cash Fund (Fund 4100) are generated from wildlife hunting and fishing license fees and various other sources. Revenue from the sale of habitat stamps is also deposited into the Wildlife Cash Fund and is the primary revenue source for land and water acquisitions made by the Division. (Anyone aged 18 through 64 must buy a $10 habitat stamp in order to purchase a hunting or fishing license.) Final revenue for FY 2018-19 will not be available until the middle of August 2019 after final year-end close. At the end of FY 2017-18, total fund equity in the Wildlife Cash Fund (Fund 4100) was approximately $43,178,387.
Describe any changes in revenue collections that will be necessary to fund this project:	No changes in revenue collections will be necessary to fund this request.

FY 2018-19 Actual Ending Fund Balance	FY 2019-20 Projected Ending Fund Balance	FY 2019-20 Projected Ending Fund Balance with Project Approval	FY 2020-21 Projected Ending Fund Balance with Project Approval
TBD	**TBD**	**TBD**	**TBD**

CASH FUND PROJECTIONS			
Cash Fund name and number:	**State Parks Cash Fund**		
Statutory reference to Cash Fund:	**C.R.S. 33-10-111**		
Describe how revenue accrues to the fund:	The Parks and Outdoor Recreation Cash Fund supports the general operations of Colorado's 41 state parks and other outdoor recreation programs. Revenue is generated from the sale of park passes (daily and annual) and other sources. CPW also earns revenue from Great Outdoors Colorado (GOCO) and the Colorado Lottery for a large number of its capital projects. Final revenue for FY 2018-19 will not be available until the middle of August 2019 at the earliest, after final year-end close. At the end of FY 2017-18, total fund equity in the Parks and Outdoor Recreation Cash Fund (Fund 1720) was approximately $2,381,721.		
Describe any changes in revenue collections that will be necessary to fund this project:	No changes in revenue collections will be necessary to fund this request.		
FY 2018-19 Actual Ending Fund Balance	**FY 2019-20 Projected Ending Fund Balance**	**FY 2019-20 Projected Ending Fund Balance with Project Approval**	**FY 2020-21 Projected Ending Fund Balance with Project Approval**
TBD	**TBD**	**TBD**	**TBD**

Attachment A:
Colorado Parks and Wildlife Website Redesign and Platform Refresh
Projected Timeline and Cost Estimates

Phase	Weekly Utilization	Cost
Phase 1 - approx. 5 weeks		
Research	50%	20,000
Content strategy development	100%	40,000
Digital marketing	50%	20,000
Technical Architect/Director	100%	40,000
User Experience Director	100%	40,000
Project Manager	50%	20,000
Phase 2 - approx. 8 weeks		
User Experience Director	100%	64,000
Creative Director	100%	64,000
Digital marketing	50%	32,000
Technical Architect/Director	100%	64,000
Content strategy	100%	64,000
Project Manager	50%	32,000
Phase 3 - approx. 10 weeks		
Technical Architect/Director	100%	80,000
Developer	100%	80,000
Developer	100%	80,000
Digital marketing	25%	20,000
Developer	100%	80,000
Project Manager	50%	40,000
5% project contingency:		44,000
Total estimated cost:		924,000

RY_CC-IT: CAPITAL CONSTRUCTION INFORMATION TECHNOLOGY REQUEST FOR FY 2020-21

Department	Natural Resources	Signature Department Approval	Date 9/13/19
Project Title	Colorado Parks and Wildlife Website Redesign and Platform Migration	Signature OIT Approval	Date 9/18/19
Project Year(s)	FY 2020 - 21	Signature OSPB Approval	Date 10/1/19
Department Priority Number			
Five-Year Roadmap?	Yes	Name and e-mail address of preparer	Michael Regan, michael.regan@state.co.us

Revision? Yes No If yes, last submission date:	Total Project Costs	Total Prior Year Appropriations	Current Request FY 2020-21	Year 2 Request	Year 3 Request	Year 4 Request	Year 5 Request
(1) Consultants/Contractors	$ 880,000	$ -	$ 880,000	$ -	$ -	$ -	$ -
(2) Quality Assurance	$ -	$ -	$ -	$ -	$ -	$ -	$ -
(3) Independent Verification and Validation (IV&V)	$ -	$ -	$ -	$ -	$ -	$ -	$ -
(4) Training	$ -	$ -	$ -	$ -	$ -	$ -	$ -
(5) Leased Space (Temporary)	$ -	$ -	$ -	$ -	$ -	$ -	$ -
(6) Feasibility Study	$ -	$ -	$ -	$ -	$ -	$ -	$ -
(7a) Inflation for Professional Services	$ -	$ -	$ -	$ -	$ -	$ -	$ -
(7b) Inflation Percentage Applied		0.00%	0.00%	0.00%	0.00%	0.00%	0.00%
(8) Other Services/Costs	$ -	$ -	$ -	$ -	$ -	$ -	$ -
(9) *Total Professional Services*	$ 880,000	$ -	$ 880,000	$ -	$ -	$ -	$ -
(1) Software COTS	$ -	$ -	$ -	$ -	$ -	$ -	$ -
(2) Software Built	$ -	$ -	$ -	$ -	$ -	$ -	$ -
(2a) Inflation on Software	$ -	$ -	$ -	$ -	$ -	$ -	$ -
(2b) Inflation Percentage Applied		0.00%	0.00%	0.00%	0.00%	0.00%	0.00%
(4) *Total Software*	$ -	$ -	$ -	$ -	$ -	$ -	$ -
(1) Servers	$ -	$ -	$ -	$ -	$ -	$ -	$ -
(2) PCs, Laptops, Terminals, PDAs	$ -	$ -	$ -	$ -	$ -	$ -	$ -
(3) Printers, Scanners, Peripherals	$ -	$ -	$ -	$ -	$ -	$ -	$ -
(4) Network Equipment/Cabling	$ -	$ -	$ -	$ -	$ -	$ -	$ -
(5) Other (Specify)	$ -	$ -	$ -	$ -	$ -	$ -	$ -
(6) Miscellaneous	$ -	$ -	$ -	$ -	$ -	$ -	$ -
(7) *Total Equipment and Miscellaneous Costs*	$ -	$ -	$ -	$ -	$ -	$ -	$ -
(1) 5% project contingency	$ 44,000	$ -	$ 44,000	$ -	$ -	$ -	$ -
Total Budget Request (A+B+C+D)	$ 924,000	$ -	$ 924,000	$ -	$ -	$ -	$ -
GF	$ -	$ -	$ -	$ -	$ -	$ -	$ -
CF	$ 924,000	$ -	$ 924,000	$ -	$ -	$ -	$ -
RF	$ -	$ -	$ -	$ -	$ -	$ -	$ -
FF	$ -	$ -	$ -	$ -	$ -	$ -	$ -
check (should = 0)	$924,000	$0	$924,000	$0	$0	$0	$0